Introduction to Digital Systems

Part III (Sequential Components)

2025/2026

Sequential Synchronous Modules/Blocks

Multibit registers, Counters and Shift-registers

Arnaldo Oliveira, Augusto Silva, Iouliia Skliarova, Adão Silva

Lecture Contents

- Single and multibit registers
  - Flip-flop based
  - Latch based
- Binary counter design
  - Up counter synthesis
  - Up/down counter synthesis
- Standard counters
  - Free running
  - Constrained counting
  - Cascading counters
- Shift-registers
    - Applications
    - Serial-in, serial-out
    - Serial-in, parallel-out
    - Parallel-in, serial-out
    - Parallel-in , parallel-out
    - Universal (load, shift, hold)

Some figures and content extracted from: John F. Wakerly, "Digital Design – Principles and Practices", 4 ed., Pearson – Prentice Hall, 2006 (chapter 7). Reading chapter 7 (4th ed.) or chapter 11 (5th ed.) is highly recommended.

74x74 – Dual Positive-edge-triggered D Flip-flop w/ Asynchronous Preset (Set) and Clear (Reset) - Revisited

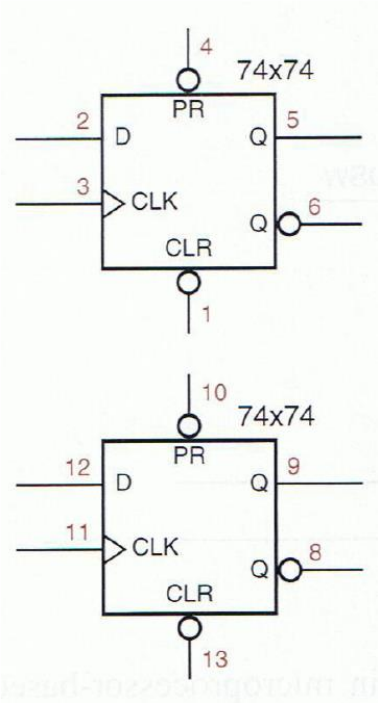

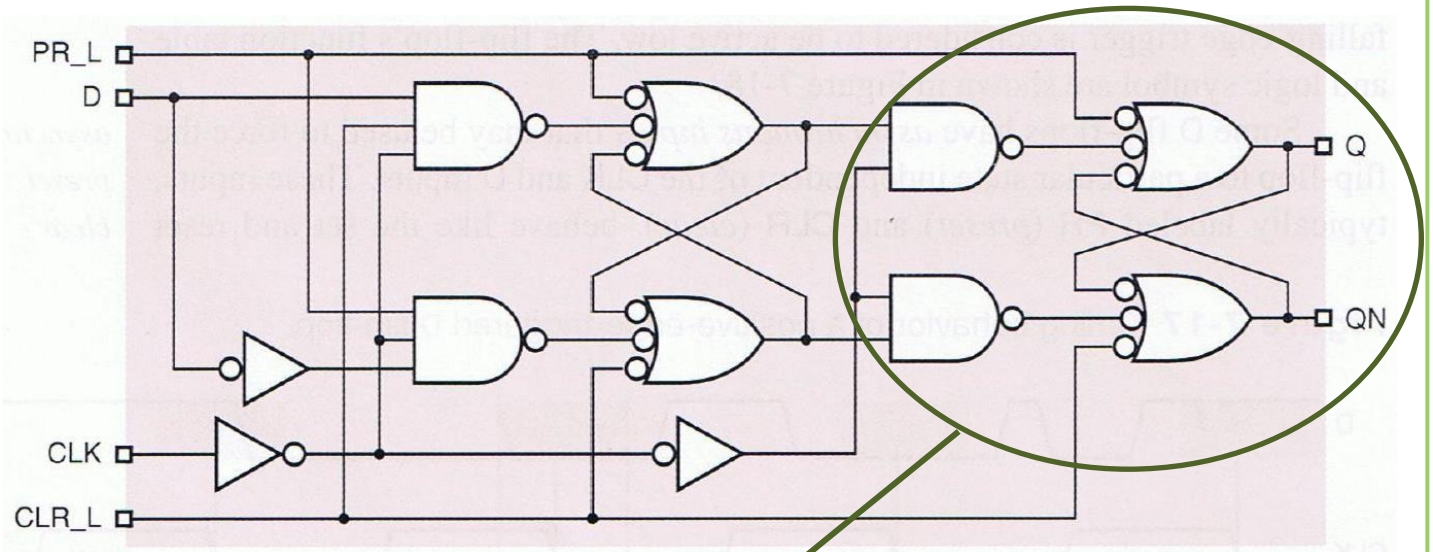

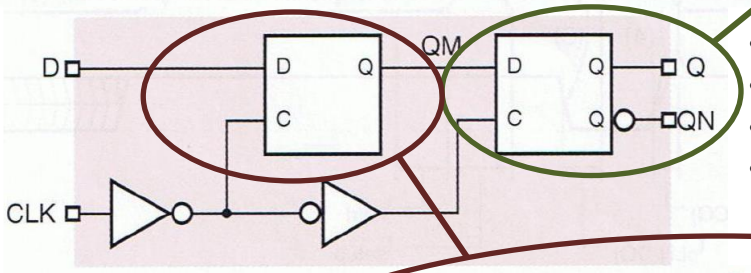

- Additional latches inputs: PR_L, CLR_L
- **PR_L=0** forces latches Q to **1**
- **CLR_L=0** forces latches Q to **0**
- PR_L and CLR_L applied to first latch to neutralize D and C

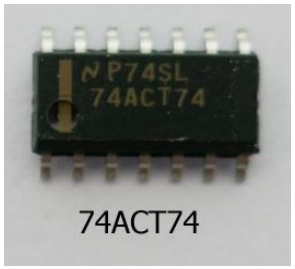

74ACT74

Power supply pins:
14 (Vcc)
7 (GND)

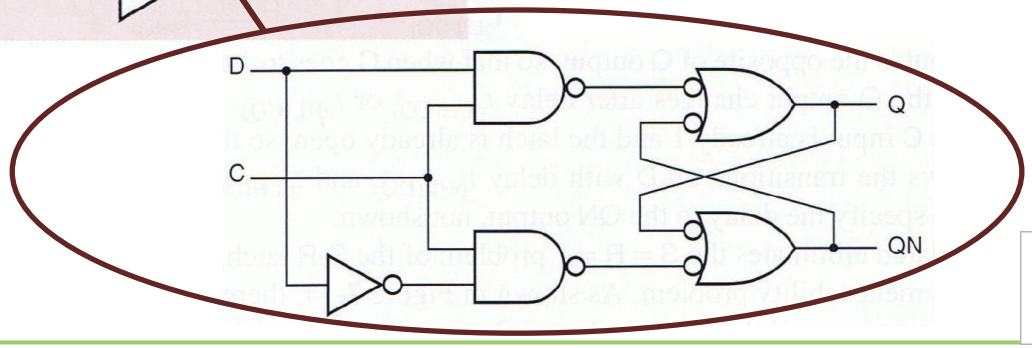

74x74 – Dual Positive-edge-triggered D Flip-flop w/ Asynchronous Preset (Set) and Clear (Reset)

Forcing/Loading **0** (Clear / Reset) at Q output

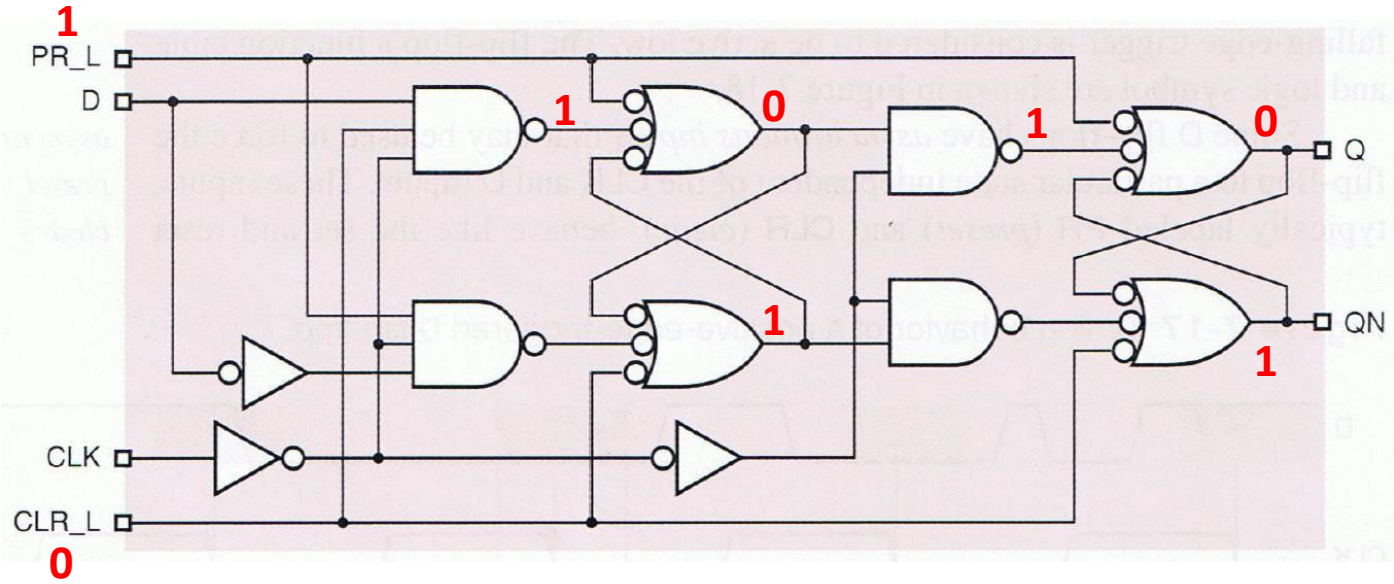

74x74 – Dual Positive-edge-triggered D Flip-flop w/ Asynchronous Preset (Set) and Clear (Reset)

Forcing/Loading **1** (Preset / Set) at Q output

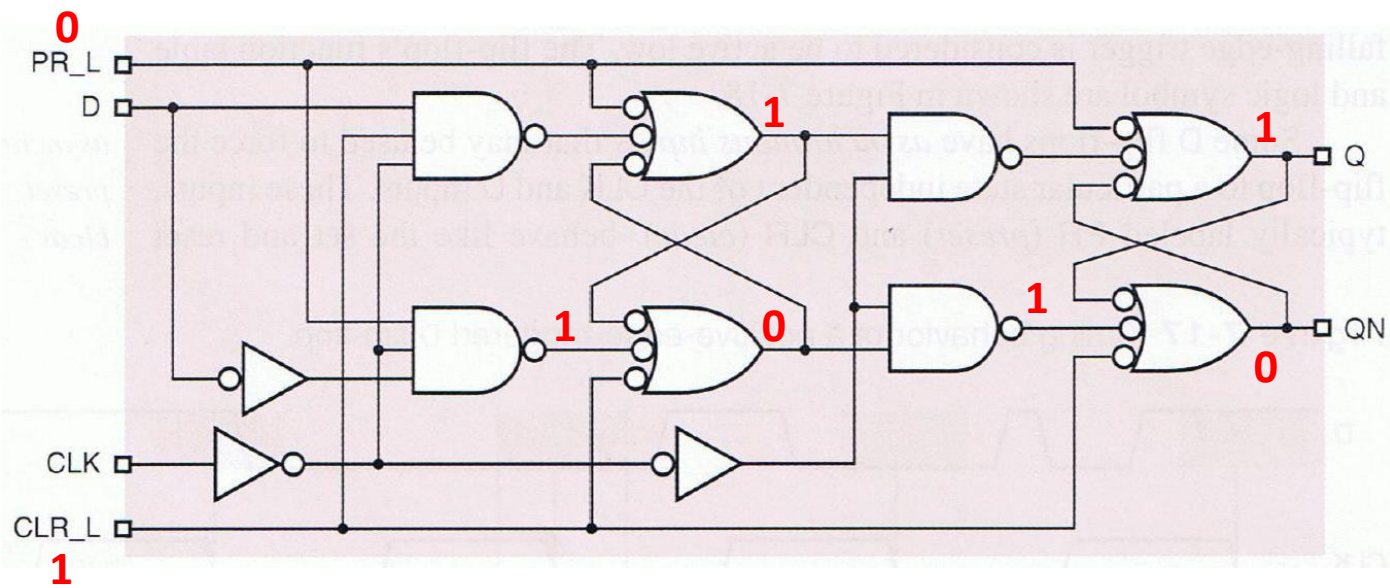

74x175/174 4-bit Flip-flop Based Register

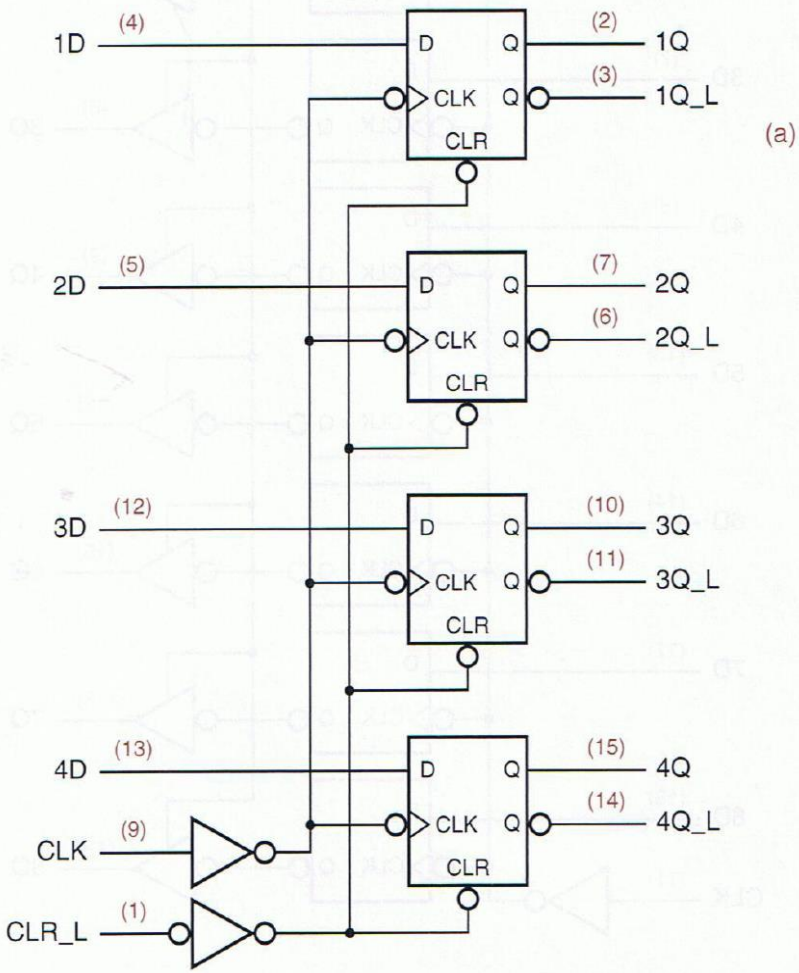

Figure 8-8
The 74x175 4-bit register: (a) logic diagram, including pin numbers for a standard 16-pin dual in-line package; (b) traditional logic symbol.

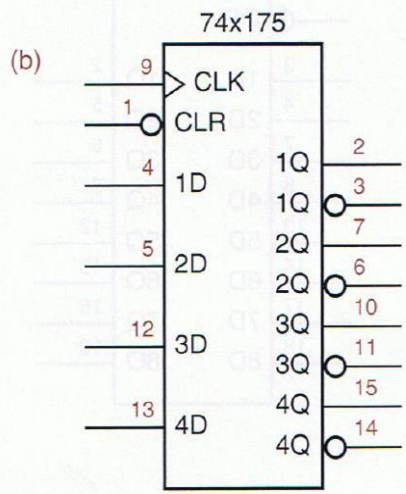

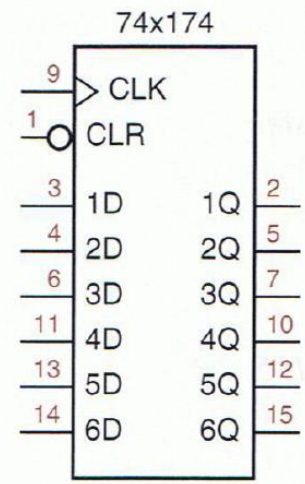

Figure 8-9
Logic symbol for the 74x174 6-bit register.

74x374 8-bit Register with 3-State Outputs

Figure 8-10
The 74x374 8-bit register:
(a) logic diagram, including pin numbers for a standard 20-pin dual in-line package;
(b) traditional logic symbol.

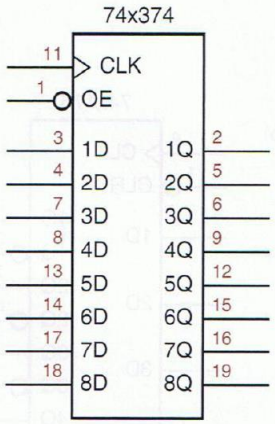

Flip-flop – edge triggered

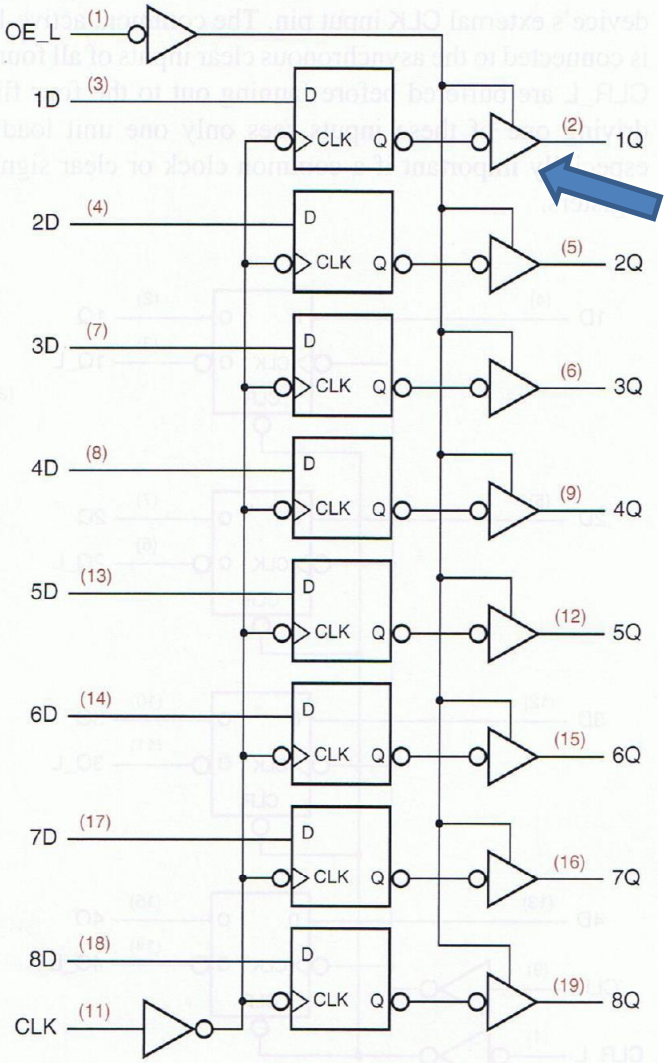

Each flip-flop output drives a three-state buffer that in turn drives an active-high output.

All of the three-state buffers are enabled by a common, active-low OE_L input

74x273/74x377 8-bit Flip-flop Based Register with Clear/Enable Input

74x377 is also a register like the 74x374, but it does not have three-state outputs. Instead, pin 1 is used as an active-low clock-enable input EN_L. If EN_L is asserted (LOW) at the rising edge of the clock, then the flip-flops are loaded from the data inputs; otherwise, they retain their present.

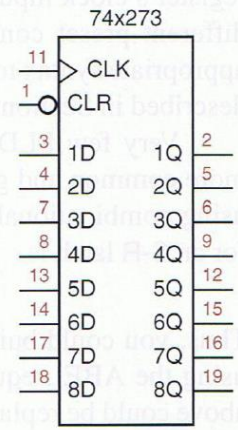

Figure 8-12 Logic symbol for the 74x273 8-bit register.

Figure 8-13 The 74x377 8-bit register with gated clock: (a) logic symbol; (b) logical behavior of one bit.

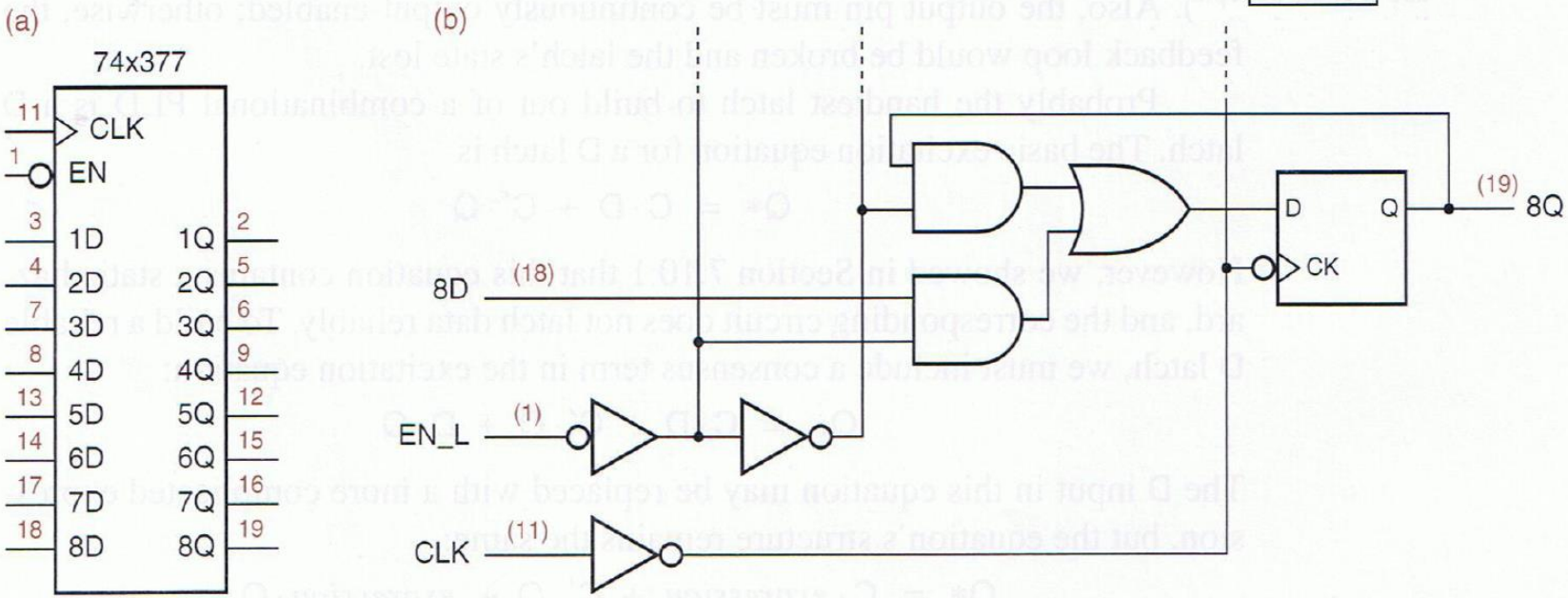

Counters

- After studying the basic elements that make up memories, it is possible to move a little further to study systems that use memory elements for other functions.

- One such system is precisely the counter, which is quite useful in various applications.
  - A counter is a set of memory elements that changes state (count value) in response to an external event.
  - The modulus of a counter is the number of states a counter goes through before returning to its initial state.
    - Example: a 4-bit counter is a modulus 16 counter (0,..,15)

4 bit Binary Up Counter Operation

Decimal	Q3 Q2 Q1 Q0	Q3* Q2* Q1* Q0* / D3 D2 D1 D0	Decimal
0	0000	0001	1
1	0001	0010	2
2	0010	0011	3
3	0011	0100	4
4	0100	0101	5
5	0101	0110	6
6	0110	0111	7
7	0111	1000	8
8	1000	1001	9
9	1001	1010	10
10	1010	1011	11
11	1011	1100	12
12	1100	1101	13
13	1101	1110	14
14	1110	1111	15
15	1111	0000	0

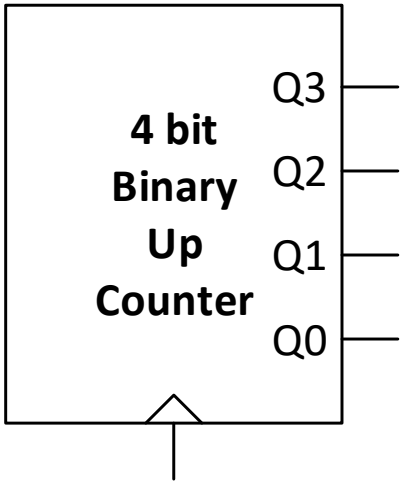

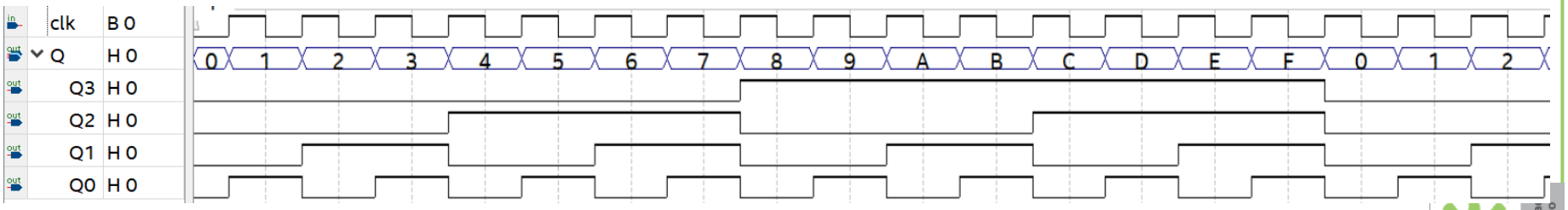

4 bit Binary Up Counter Synthesis

Decimal	Q3 Q2 Q1 Q0	Q3* Q2* Q1* Q0* / D3 D2 D1 D0	Decimal
0	0000	0001	1
1	0001	0010	2
2	0010	0011	3
3	0011	0100	4
4	0100	0101	5
5	0101	0110	6
6	0110	0111	7
7	0111	1000	8
8	1000	1001	9
9	1001	1010	10
10	1010	1011	11
11	1011	1100	12
12	1100	1101	13
13	1101	1110	14
14	1110	1111	15
15	1111	0000	0

Minimized Excitation equations

D3

Q3 \ Q2	Q1 Q0: 00	01	11	10
00				
01			1	
11	1	1		1
10	1	1	1	1

$$D_3 = Q_3.\overline{Q_2} + Q_3.\overline{Q_1} + Q_3.\overline{Q_0} + \overline{Q_3}.Q_2.Q_1.Q_0$$

D2

Q3 \ Q2	Q1 Q0: 00	01	11	10
00			1	
01	1	1		1
11	1	1		1
10			1	

$$D_2 = Q_2.\overline{Q_1} + Q_2.\overline{Q_0} + \overline{Q_2}.Q_1.Q_0$$

D0

Q3 \ Q2	Q1 Q0: 00	01	11	10
00	1			1
01	1			1
11	1			1
10	1			1

$$D_0 = \overline{Q_0}$$

D1

Q3 \ Q2	Q1 Q0: 00	01	11	10
00		1		1
01		1		1
11		1		1
10		1		1

$$D_1 = Q_1.\overline{Q_0} + \overline{Q_1}.Q_0$$

4 bit Binary Up Counter Logic Diagram

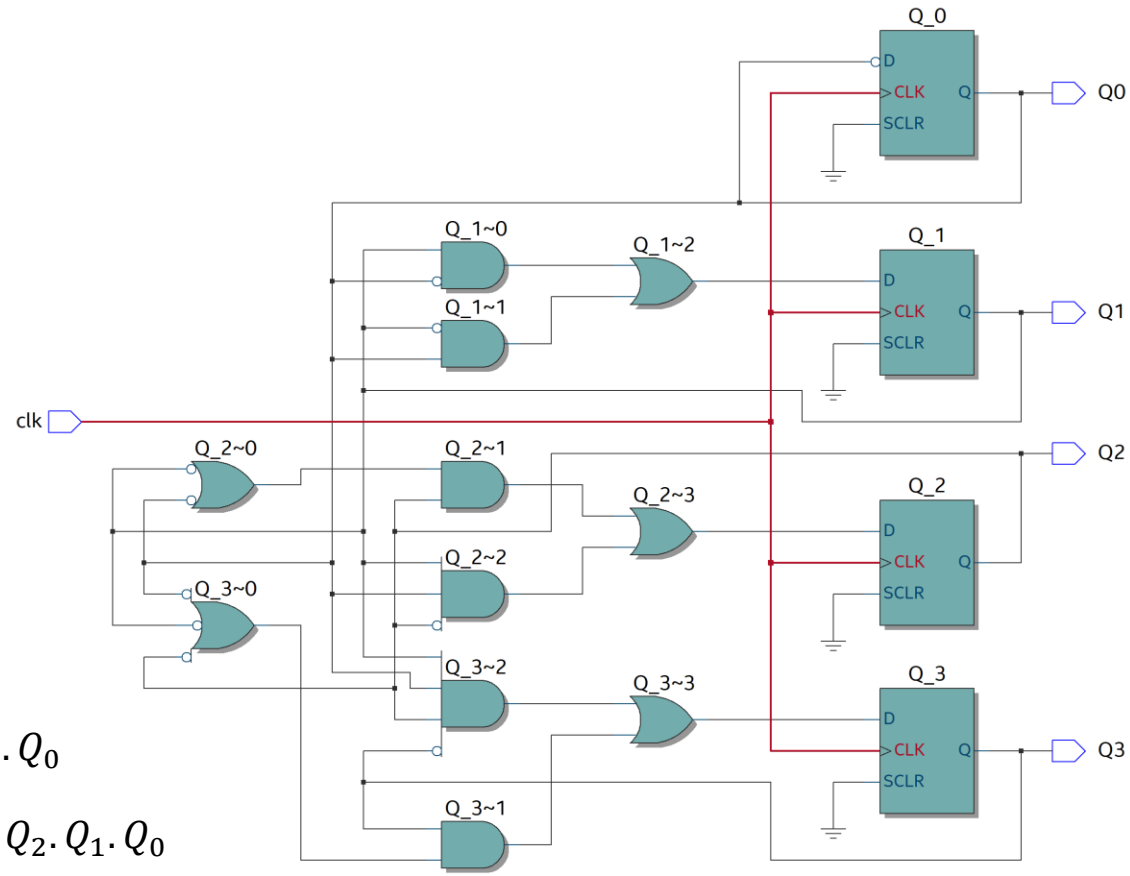

$$D_0 = \overline{Q_0}$$

$$D_1 = Q_1.\overline{Q_0} + \overline{Q_1}.Q_0$$

$$D_2 = Q_2.\overline{Q_1} + Q_2.\overline{Q_0} + \overline{Q_2}.Q_1.Q_0$$

$$D_3 = Q_3.\overline{Q_2} + Q_3.\overline{Q_1} + Q_3.\overline{Q_0} + \overline{Q_3}.Q_2.Q_1.Q_0$$

In a real circuit, flip-flops reset/clear must be connected to a reset input!

3 bit Binary Up/Down Counter Operation

Decimal	Ud	Q2 Q1 Q0	Q2* Q1* Q0* D2 D1 D0	Decimal
0	0	000	111	7
1	0	001	000	0
2	0	010	001	1
3	0	011	010	2
4	0	100	011	3
5	0	101	100	4
6	0	110	101	5
7	0	111	110	6
0	1	000	001	1
1	1	001	010	2
2	1	010	011	3
3	1	011	100	4
4	1	100	101	5
5	1	101	110	6
6	1	110	111	7
7	1	111	000	0

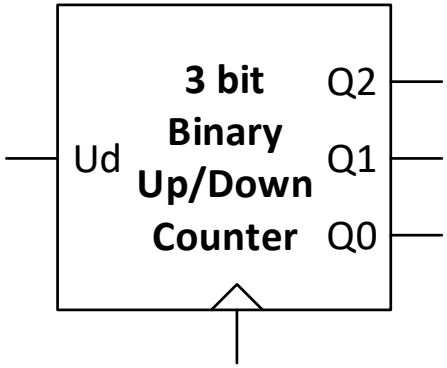

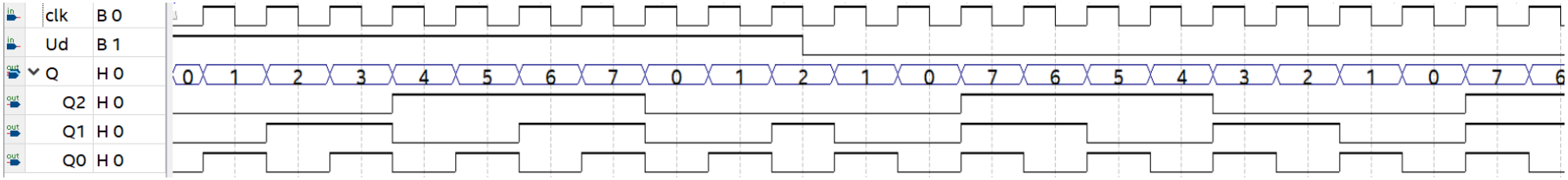

3 bit Binary Up/Down Counter Synthesis

Minimized Excitation equations

D2

Ud \ Q2 \ Q1	00	01	11	10
00	1			
01		1	1	1
11	1	1		1
10			1	

Q0

$$D_2 = \overline{Ud}.\overline{Q_2}.\overline{Q_1}.\overline{Q_0} + \overline{Ud}.Q_2.Q_0 + Ud.Q_2.\overline{Q_1} + Q_2.Q_1.\overline{Q_0} + Ud.\overline{Q_2}.Q_1.Q_0$$

Decimal	Ud	Q2 Q1 Q0	Q2* Q1* Q0* D2 D1 D0	Decimal
0	0	000	111	7
1	0	001	000	0
2	0	010	001	1
3	0	011	010	2
4	0	100	011	3
5	0	101	100	4
6	0	110	101	5
7	0	111	110	6
0	1	000	001	1
1	1	001	010	2
2	1	010	011	3
3	1	011	100	4
4	1	100	101	5
5	1	101	110	6
6	1	110	111	7
7	1	111	000	0

D1

Ud \ Q2 \ Q1	00	01	11	10
00	1		1	
01	1		1	
11		1		1
10		1		1

Q0

$$D_1 = \overline{Ud}.\overline{Q_1}.\overline{Q_0} + \overline{Ud}.Q_1.Q_0 + Ud.\overline{Q_1}.Q_0 + Ud.Q_1.\overline{Q_0}$$

D0

Ud \ Q2 \ Q1	00	01	11	10
00	1			1
01	1			1
11	1			1
10	1			1

Q0

$$D_0 = \overline{Q_0}$$

3 bit Binary Up/Down Counter Logic Diagram

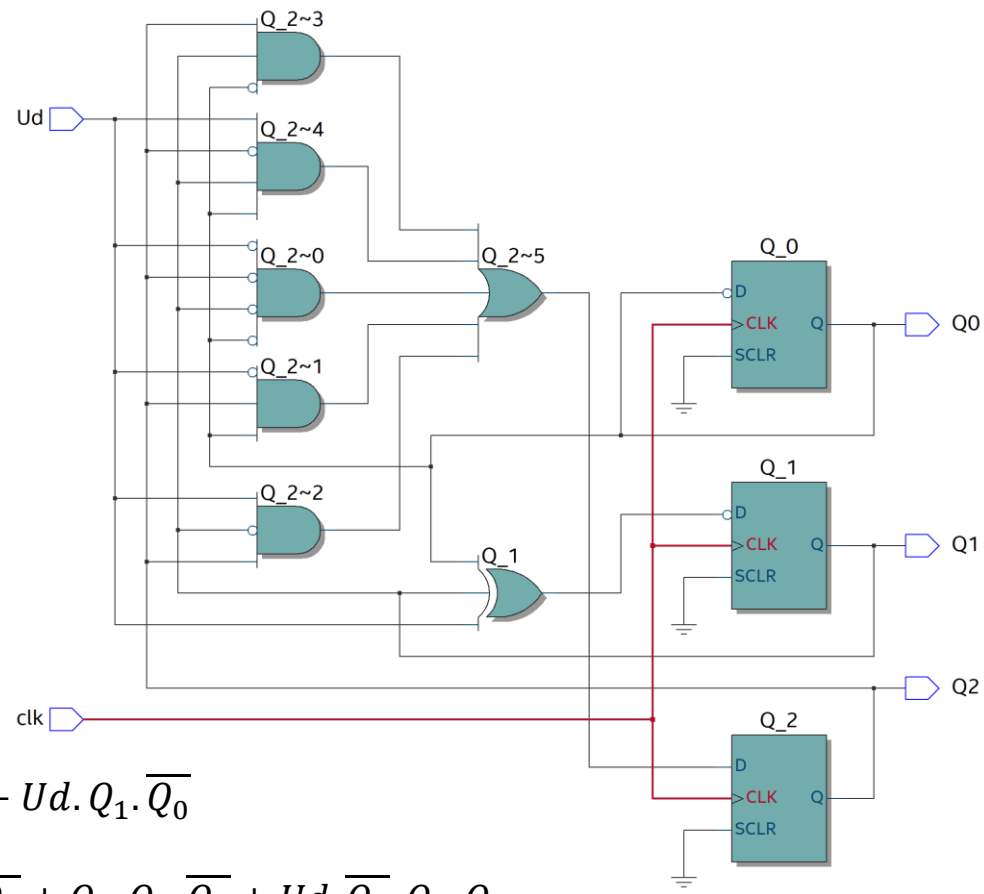

$$D_0 = \overline{Q_0}$$

$$D_1 = \overline{Ud}.\overline{Q_1}.\overline{Q_0} + \overline{Ud}.Q_1.Q_0 + Ud.\overline{Q_1}.Q_0 + Ud.Q_1.\overline{Q_0}$$

$$D_2 = \overline{Ud}.\overline{Q_2}.\overline{Q_1}.\overline{Q_0} + \overline{Ud}.Q_2.Q_0 + Ud.Q_2.\overline{Q_1} + Q_2.Q_1.\overline{Q_0} + Ud.\overline{Q_2}.Q_1.Q_0$$

In a real circuit, flip-flops reset/clear must be connected to a reset input!

74x163 Standard 4-bit Binary Up Counter

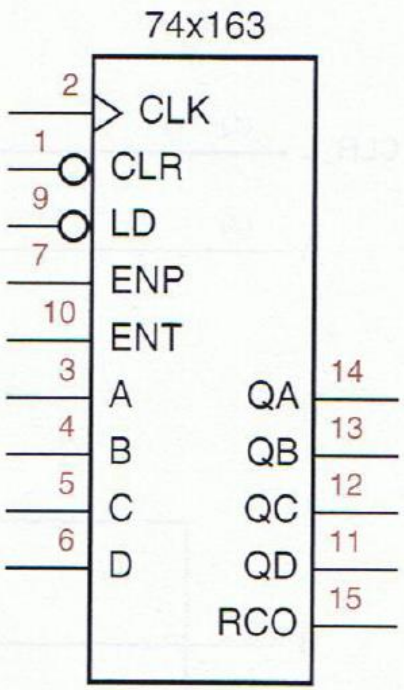

Figure 8-27 Traditional logic symbol for the 74x163.

Port	Meaning
CLK	Clock input
CLR	Synchronous clear, active low
LD	Synchronous parallel load enable, active low
ENP, ENT	Enable input
A – D	Parallel load data value
QA – QD	Counter output value
RCO	Ripple counter output (for cascading)

74x163 Counter Operation

Table 8-13 State table for a 74x163 4-bit binary counter.

Inputs				Current State				Next State				
CLR_L	LD_L	ENT	ENP	QD	QC	QB	QA	QD*	QC*	QB*	QA*	
0	x	x	x	x	x	x	x	0	0	0	0	Clear
1	0	x	x	x	x	x	x	D	C	B	A	Load
1	1	0	x	x	x	x	x	QD	QC	QB	QA	Freeze
1	1	x	0	x	x	x	x	QD	QC	QB	QA	
1	1	1	1	0	0	0	0	0	0	0	1	Count
1	1	1	1	0	0	0	1	0	0	1	0	
1	1	1	1	0	0	1	0	0	0	1	1	
1	1	1	1	0	0	1	1	0	1	0	0	
1	1	1	1	0	1	0	0	0	1	0	1	
1	1	1	1	0	1	0	1	0	1	1	0	
1	1	1	1	0	1	1	0	0	1	1	1	
1	1	1	1	0	1	1	1	1	0	0	0	
1	1	1	1	1	0	0	0	1	0	0	1	
1	1	1	1	1	0	0	1	1	0	1	0	
1	1	1	1	1	0	1	0	1	0	1	1	
1	1	1	1	1	0	1	1	1	1	0	0	
1	1	1	1	1	1	0	0	1	1	0	1	
1	1	1	1	1	1	0	1	1	1	1	0	
1	1	1	1	1	1	1	0	1	1	1	1	
1	1	1	1	1	1	1	1	0	0	0	0	

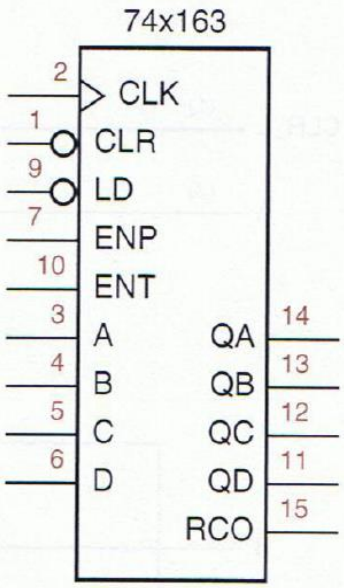

Figure 8-27 Traditional logic symbol for the 74x163.

74x163 Counter Internal Structure

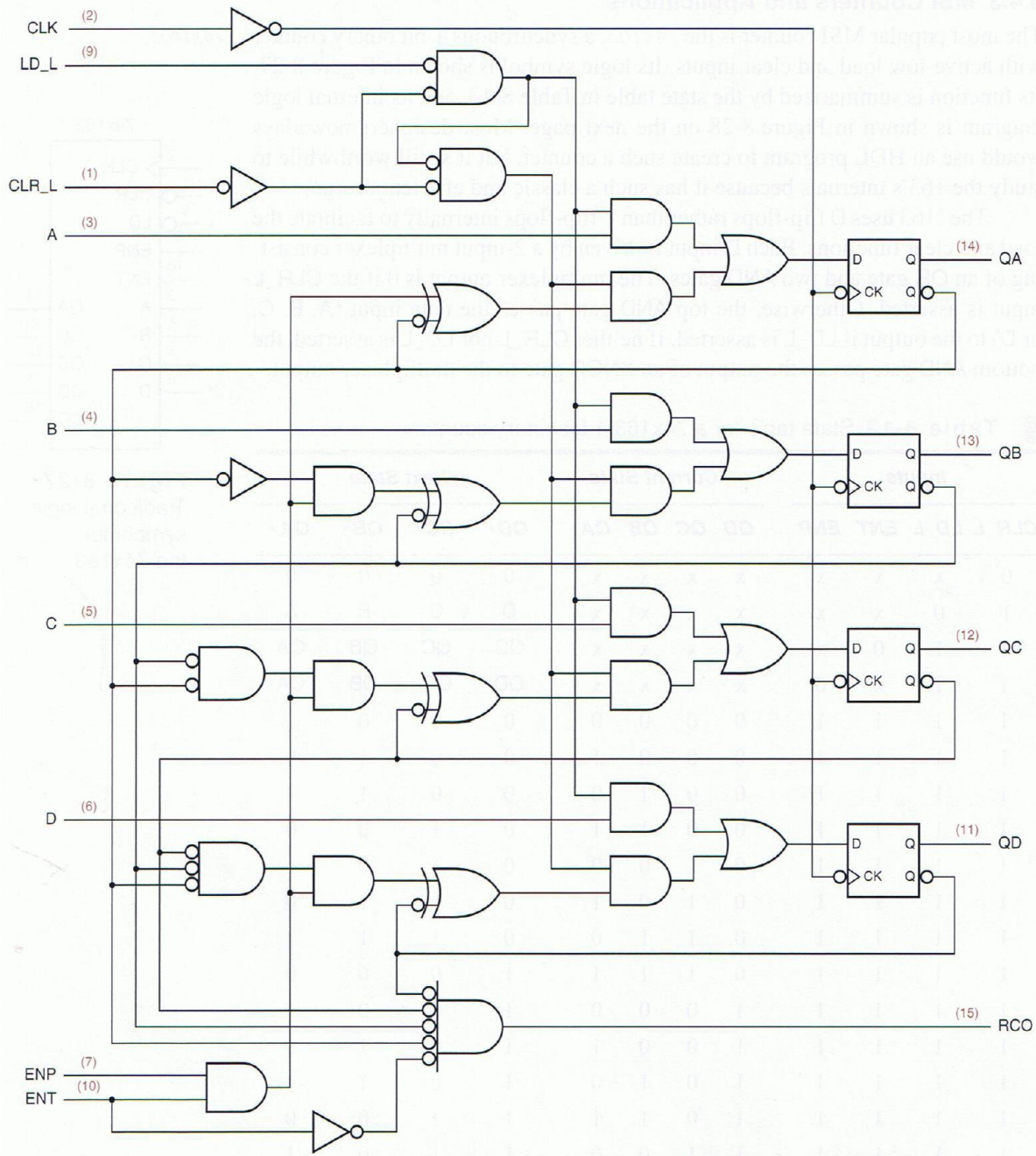

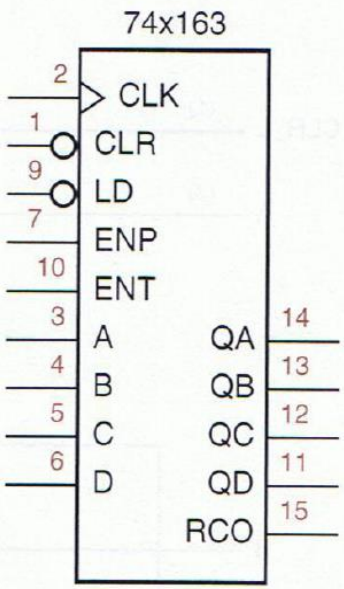

Figure 8-27 Traditional logic symbol for the 74x163.

74x163 Clearing Count Value

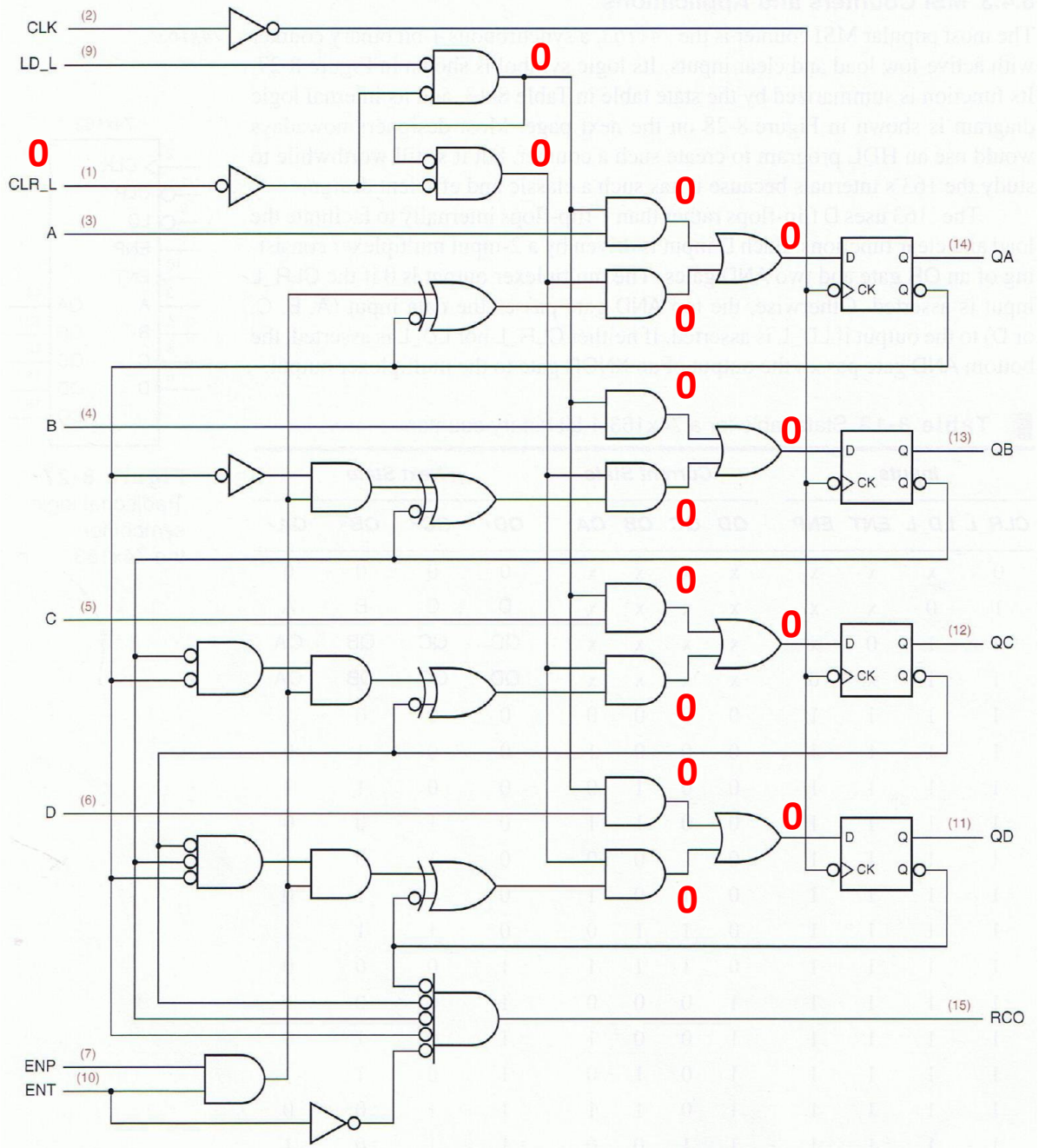

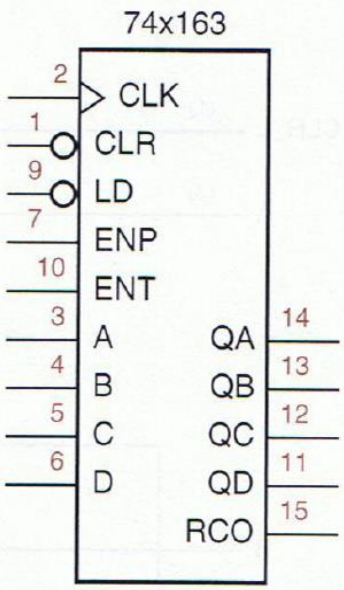

Figure 8-27 Traditional logic symbol for the 74x163.

74x163 Loading Parallel Data

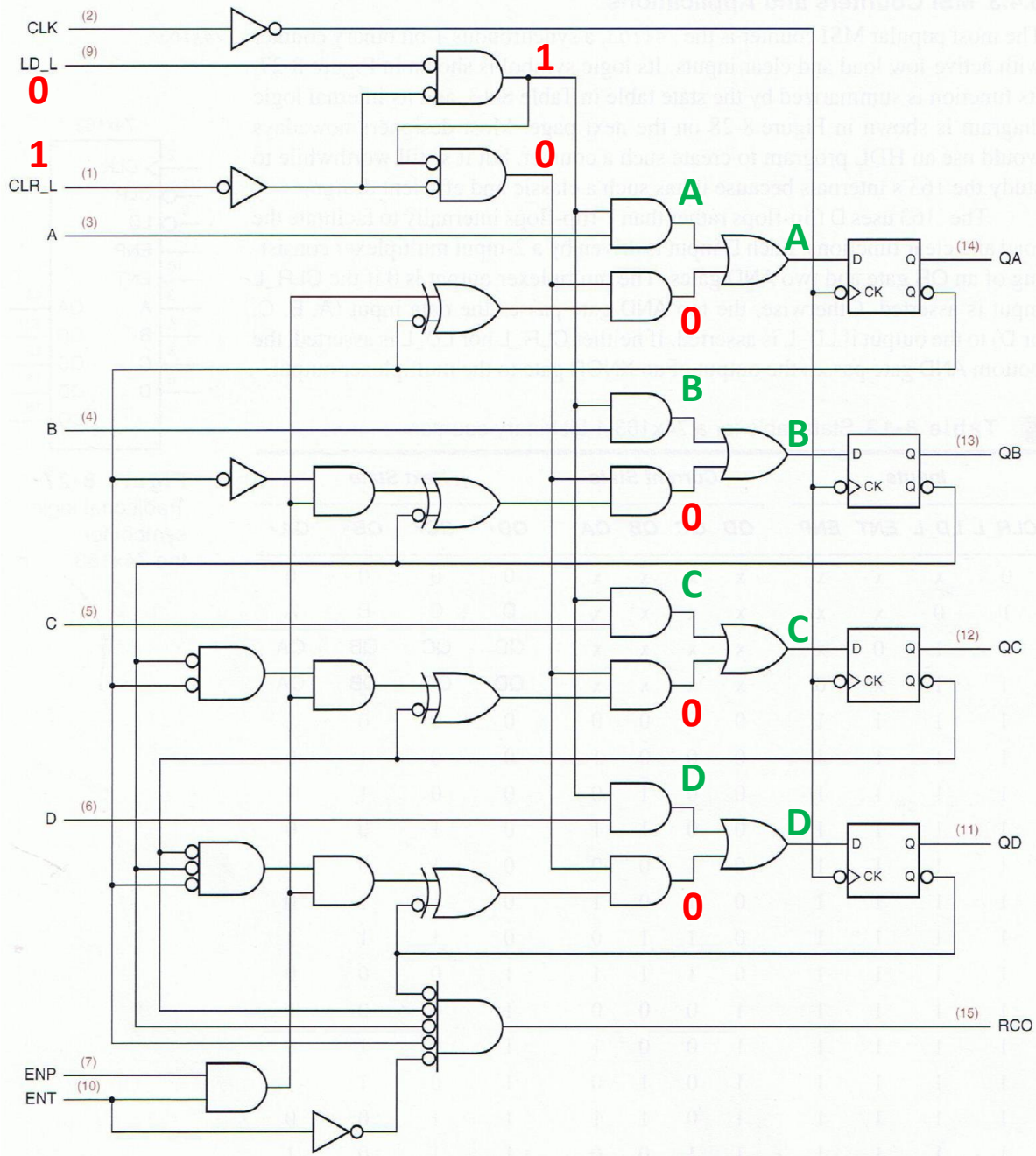

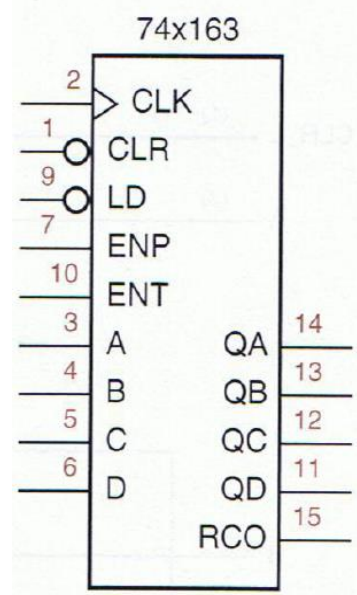

Figure 8-27 Traditional logic symbol for the 74x163.

74x163 Freeze Counter Value

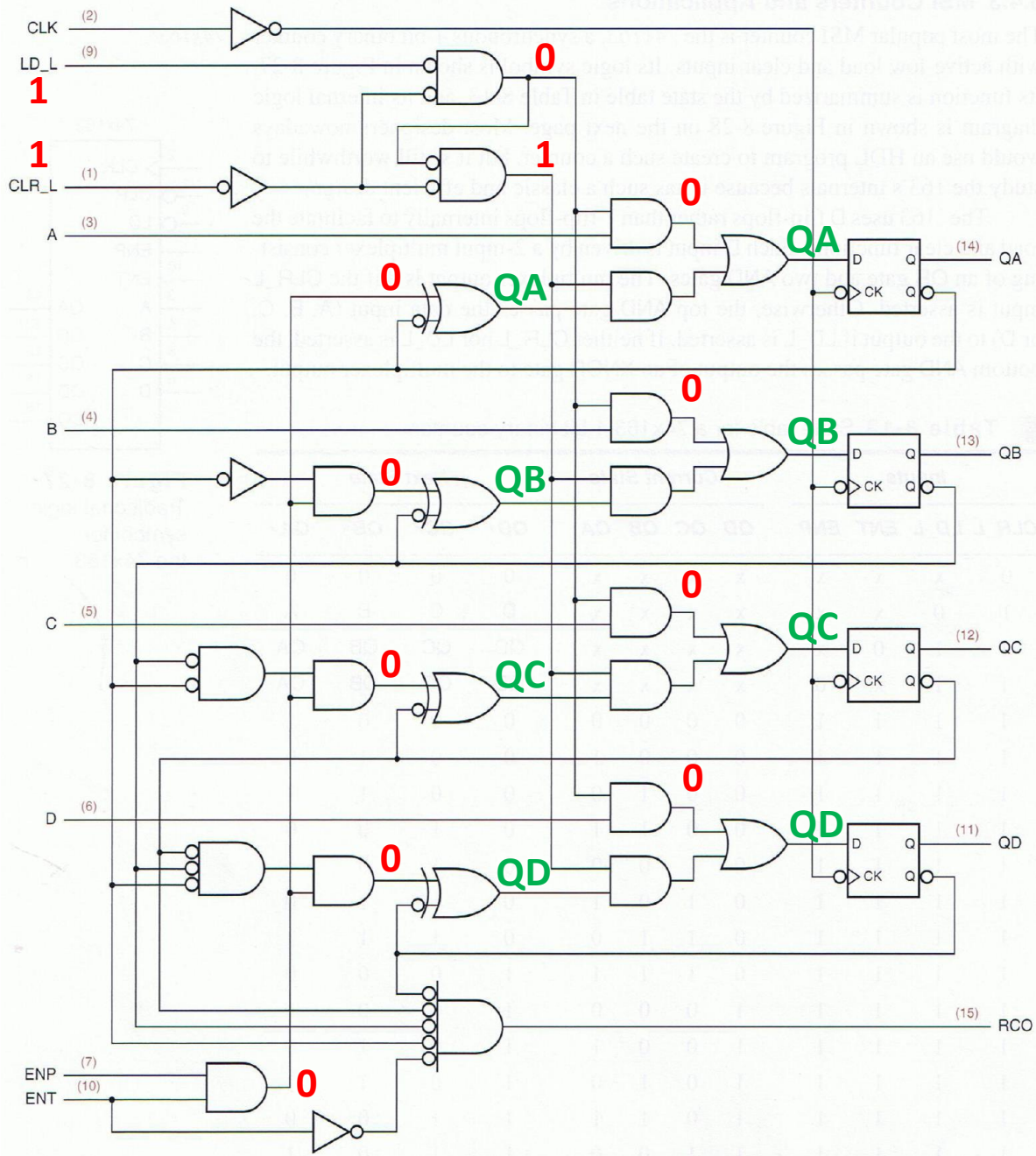

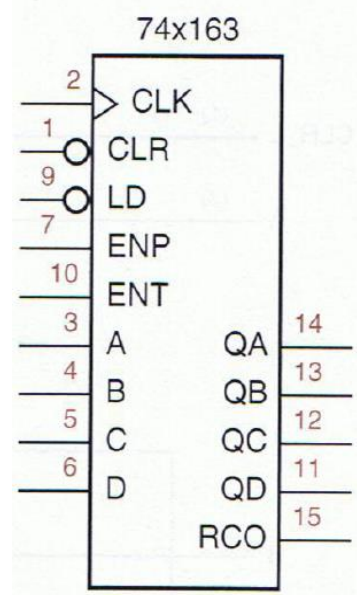

Figure 8-27 Traditional logic symbol for the 74x163.

74x163 Counting Up

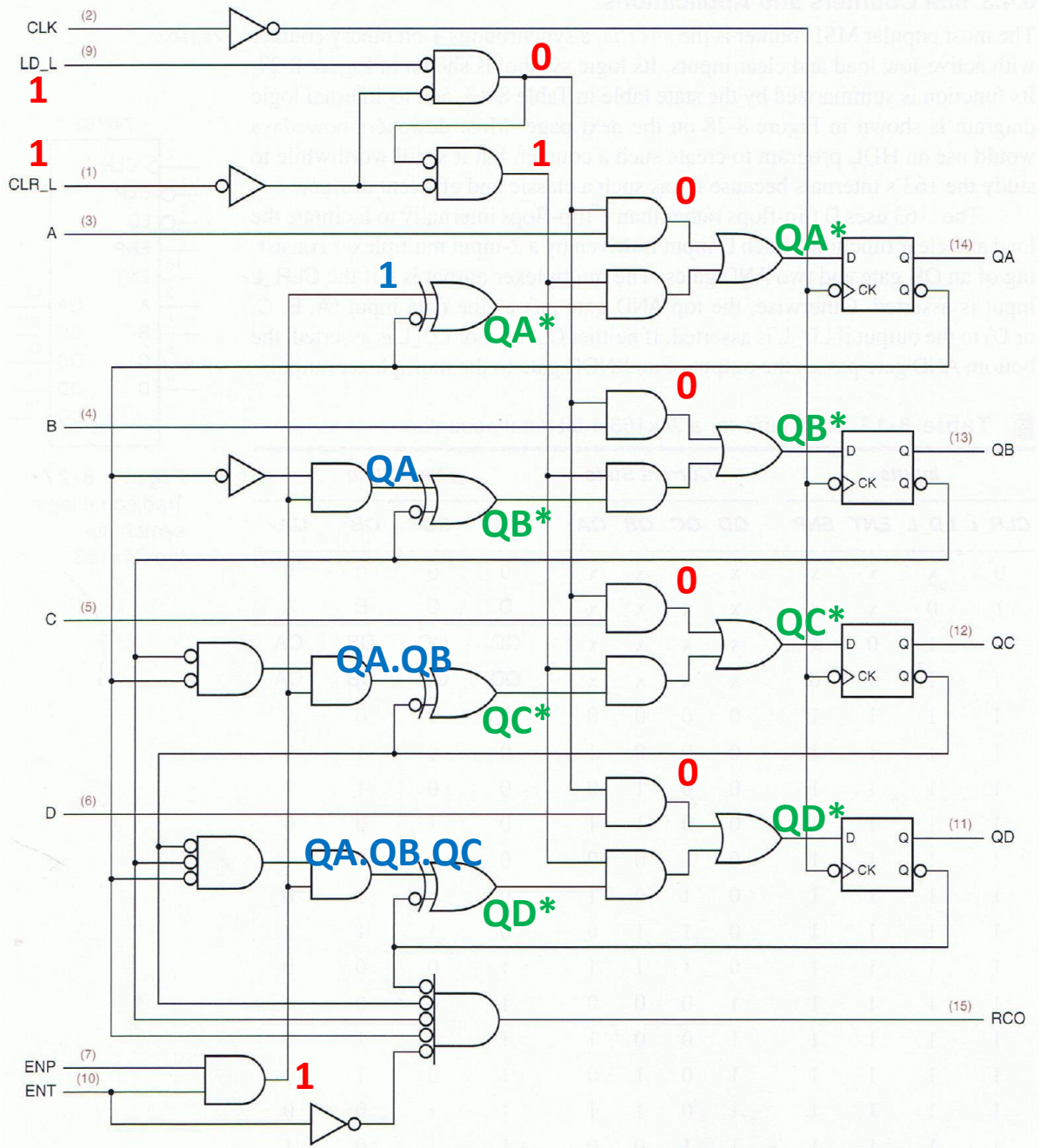

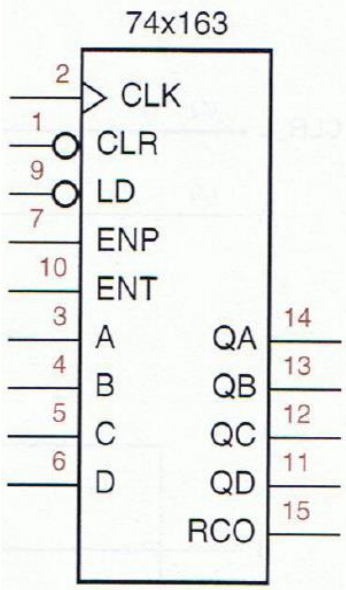

Figure 8-27 Traditional logic symbol for the 74x163.

Free Running Counter

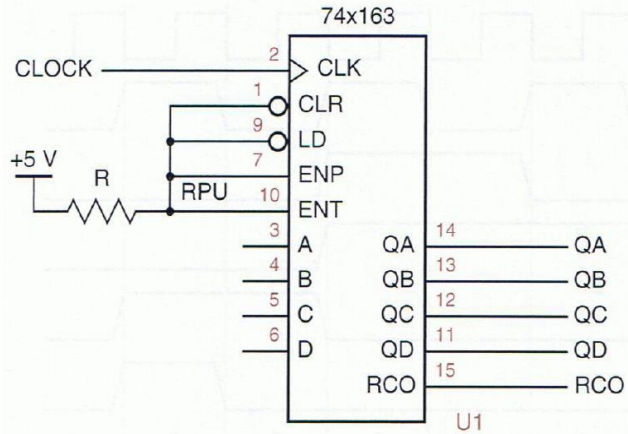

Figure 8-29 Connections for the 74x163 to operate in a free-running mode.

Figure 8-30 Clock and output waveforms for a free-running divide-by-16 counter.

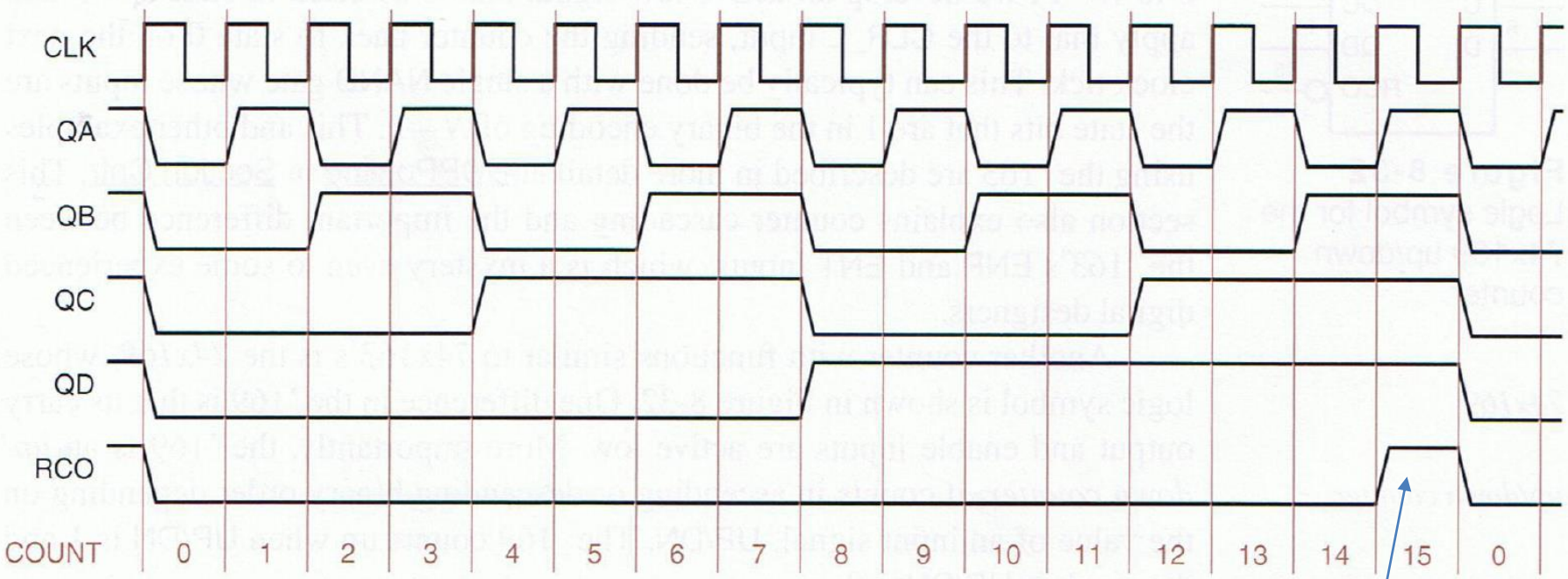

Marks the maximum count value.

Modulo “N” Counter Based on 74x163 (with 1 ≤ “N” ≤ 16)

Counts from 0 up to “N-1” and wrap around

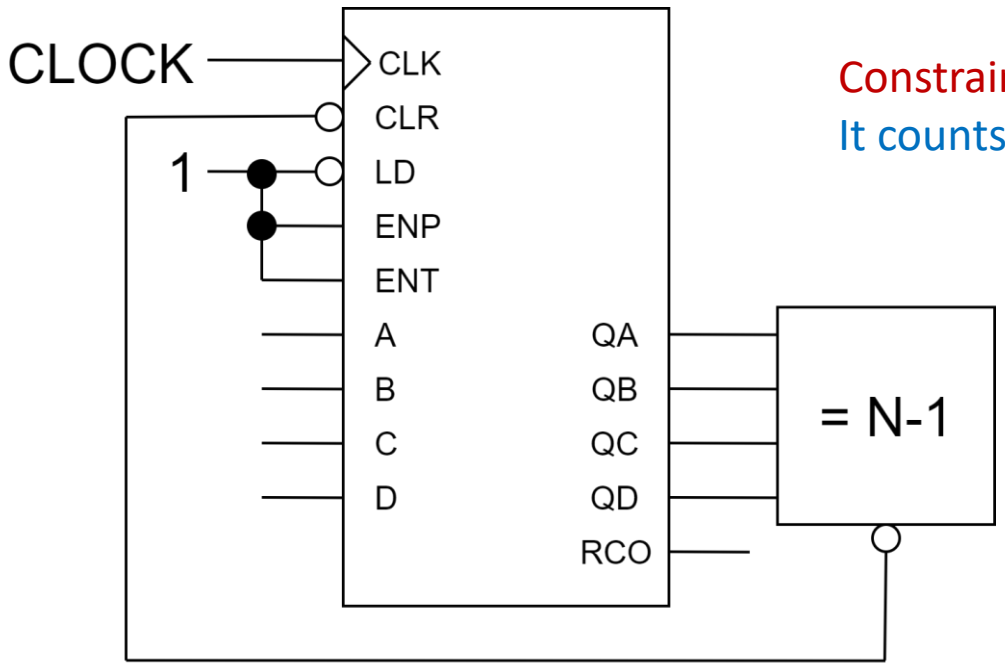

Constrained counting (4 bits)

It counts from 0 to N-1<15

How to implement efficiently the comparator with the constant N-1?

Constrained “K” to “N” Counter Based on 74x163 (with “N”>“K”)

Counts from “K” up to “N” and wrap around to “K”

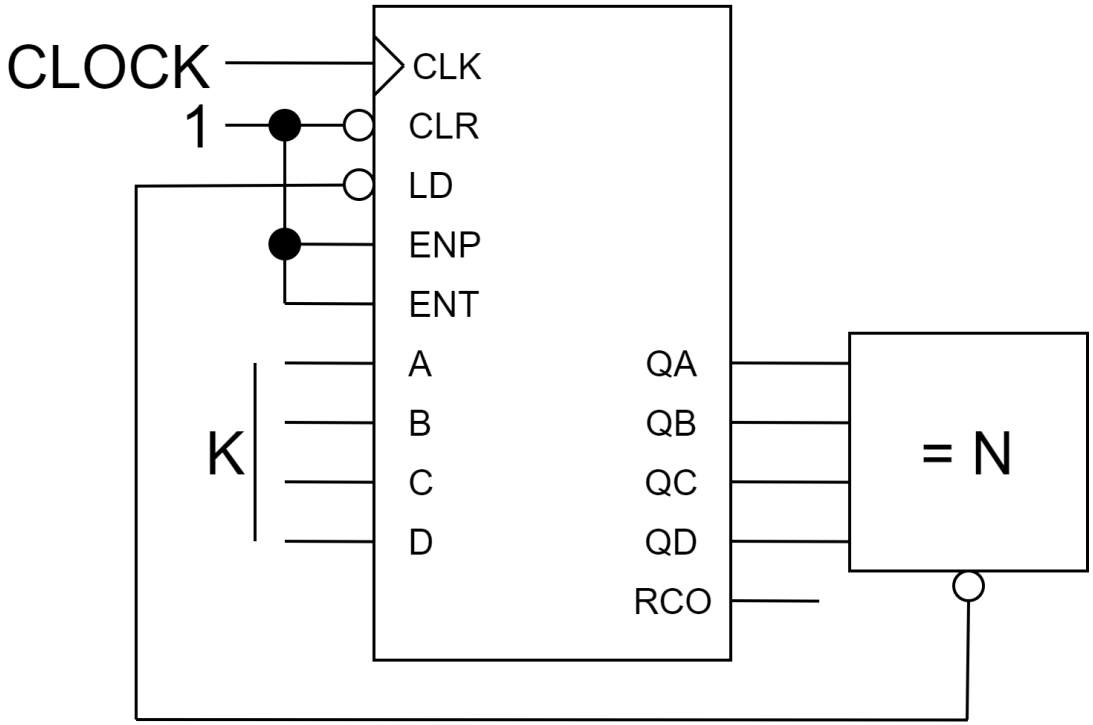

How to implement efficiently the comparator with the constant N?

Cascading 74x163 Counters

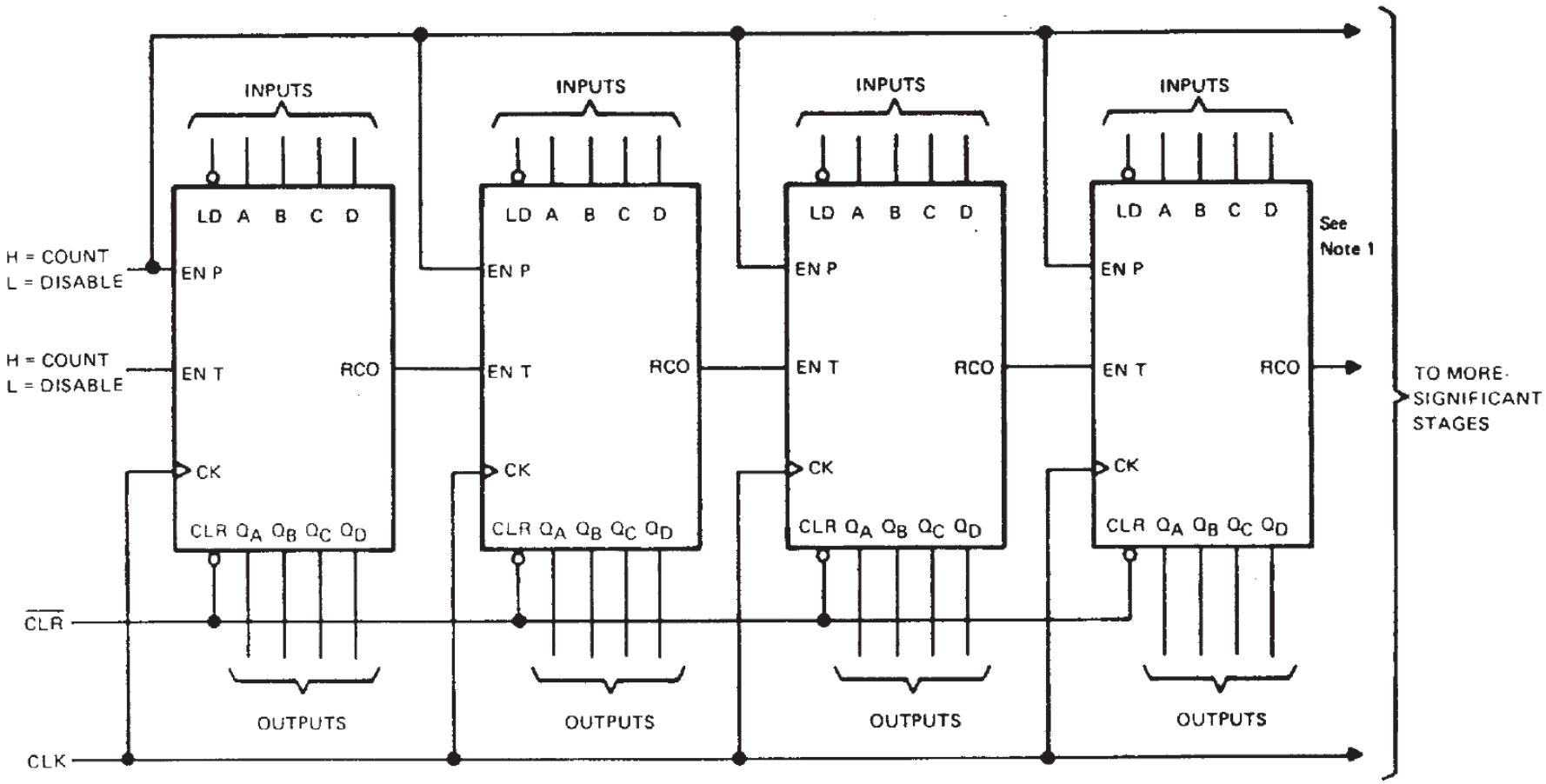

RCO is 1 when the counter reaches its maximum count, which then enables the next counter.

Maximum Operating Frequency

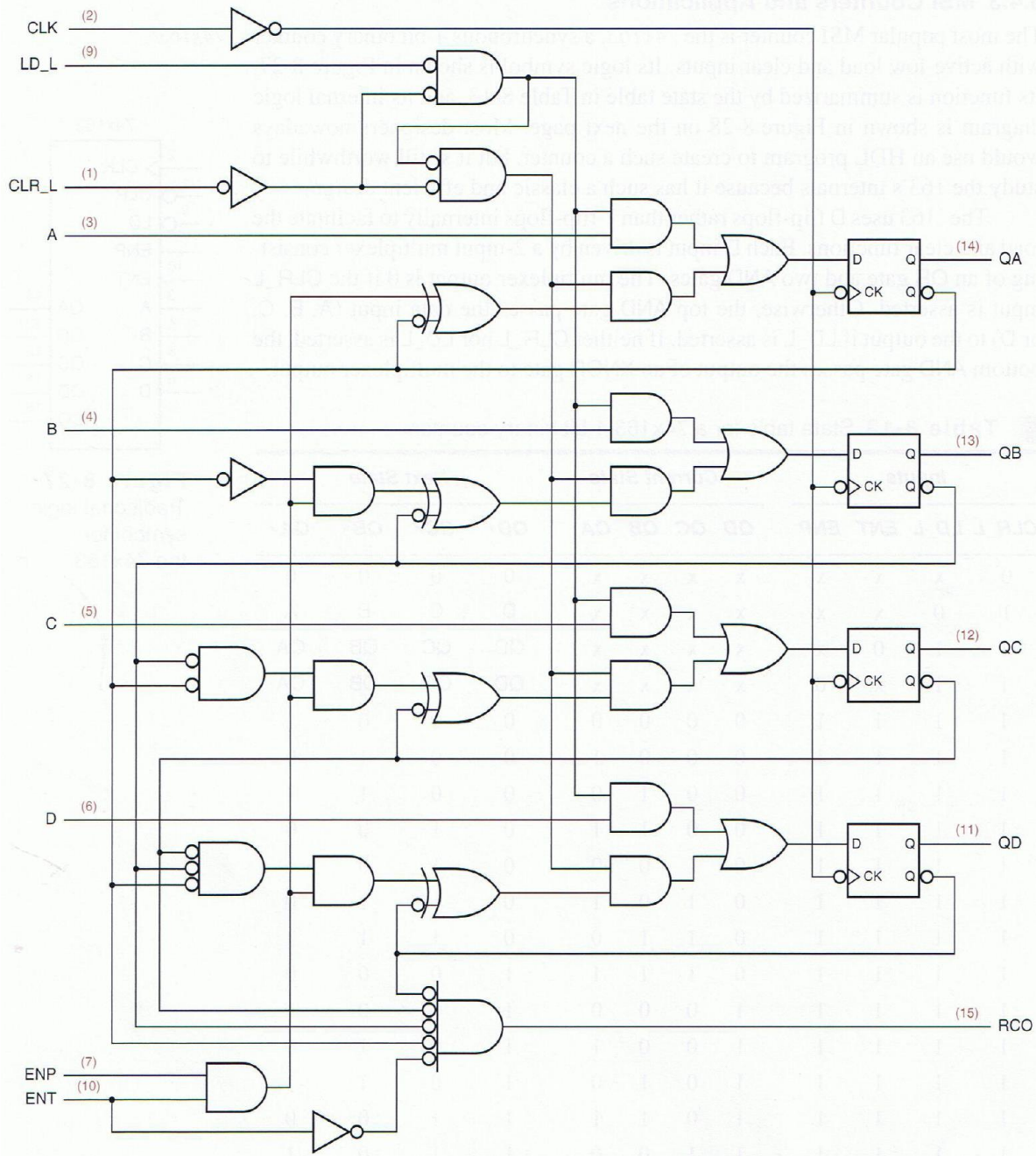

T_{min} = ?
f_{max} = ?

Consider:
T_{pHL} = 6 ns
T_{pLH} = 5 ns
T_{setup} = 4 ns
T_{hold} = 1ns
T_{gate} = 6 ns
(assume that all gates exhibit the same delay)

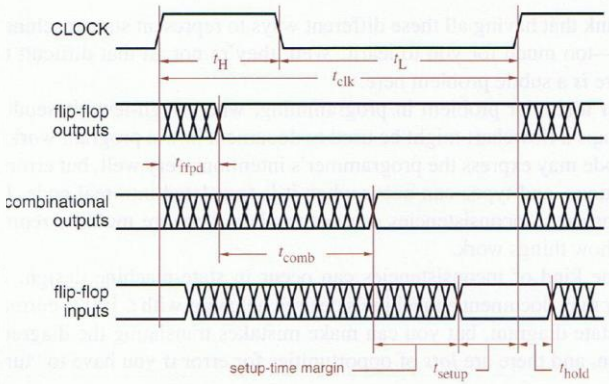

Shift Registers

- A shift register is an *n*-bit register with a provision for shifting its stored data by one bit position at each tick of the clock

- A very useful operation in digital systems.
  - Serial to parallel data conversion and vice versa.
  - It also allows you to perform simple multiplication and division operations
    - For example, the result of multiplying a number by 2 can be obtained by shifting the bits one position to the left and inserting a zero in the least significant bit position.

Serial Communication Among Different Devices

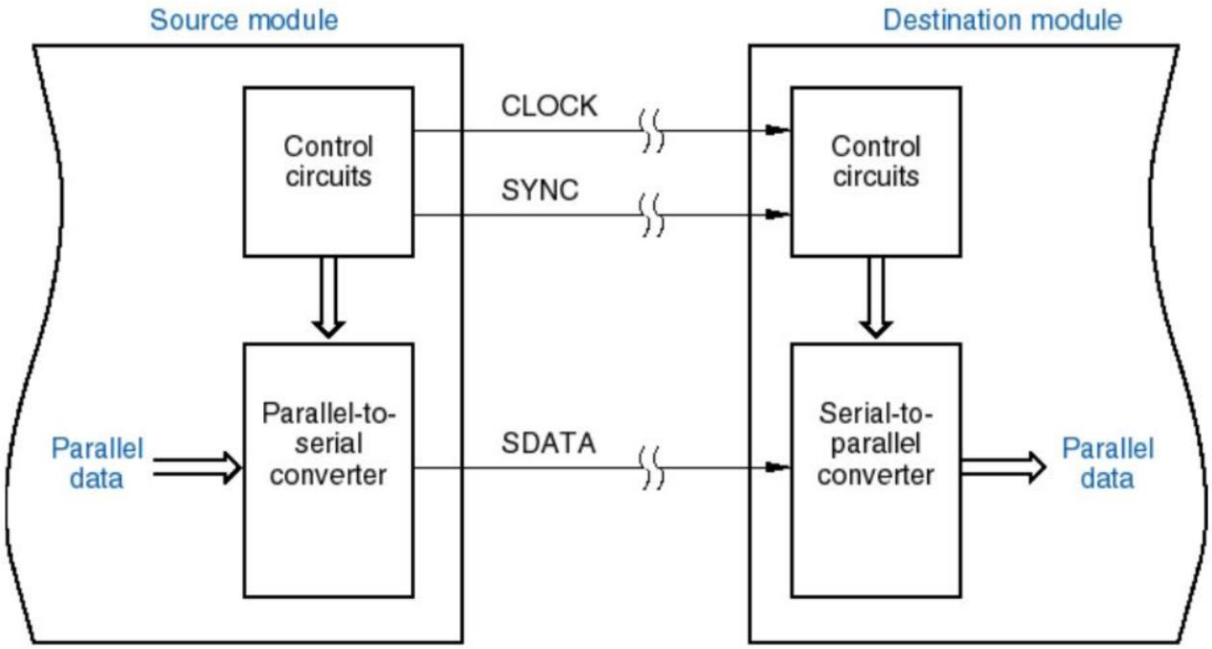

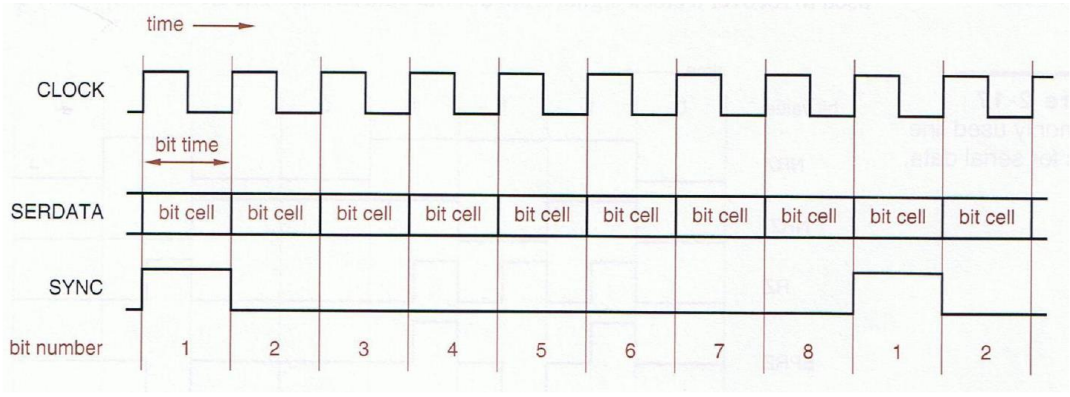

Shift Registers (Serial-in, Serial-out)

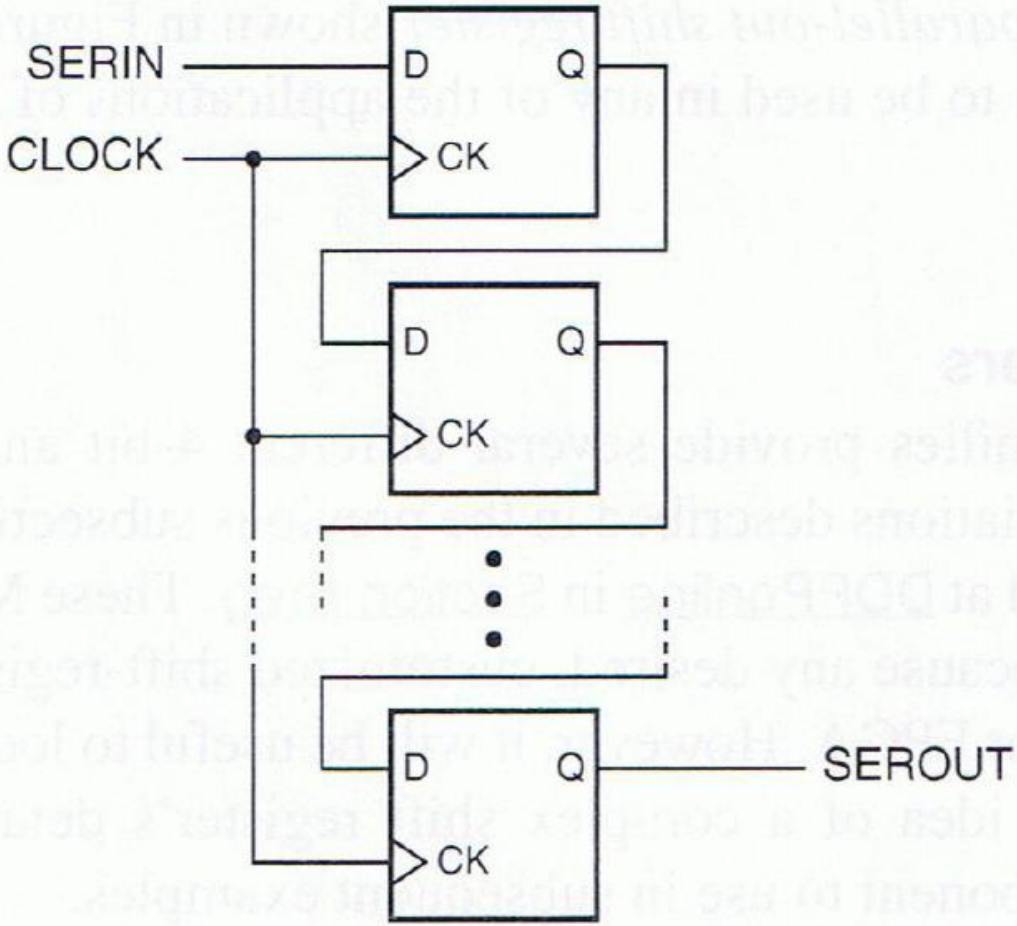

Figure 8-37
Structure of a serial-in, serial-out shift register.

Why flip-flop hold times are not violated?

Shift Registers (Serial-in, Parallel-out)

A serial-in, parallel-out shift register has outputs for all of its stored bits, making them available to other circuits. Such a shift register can be used to perform serial-to-parallel conversion.

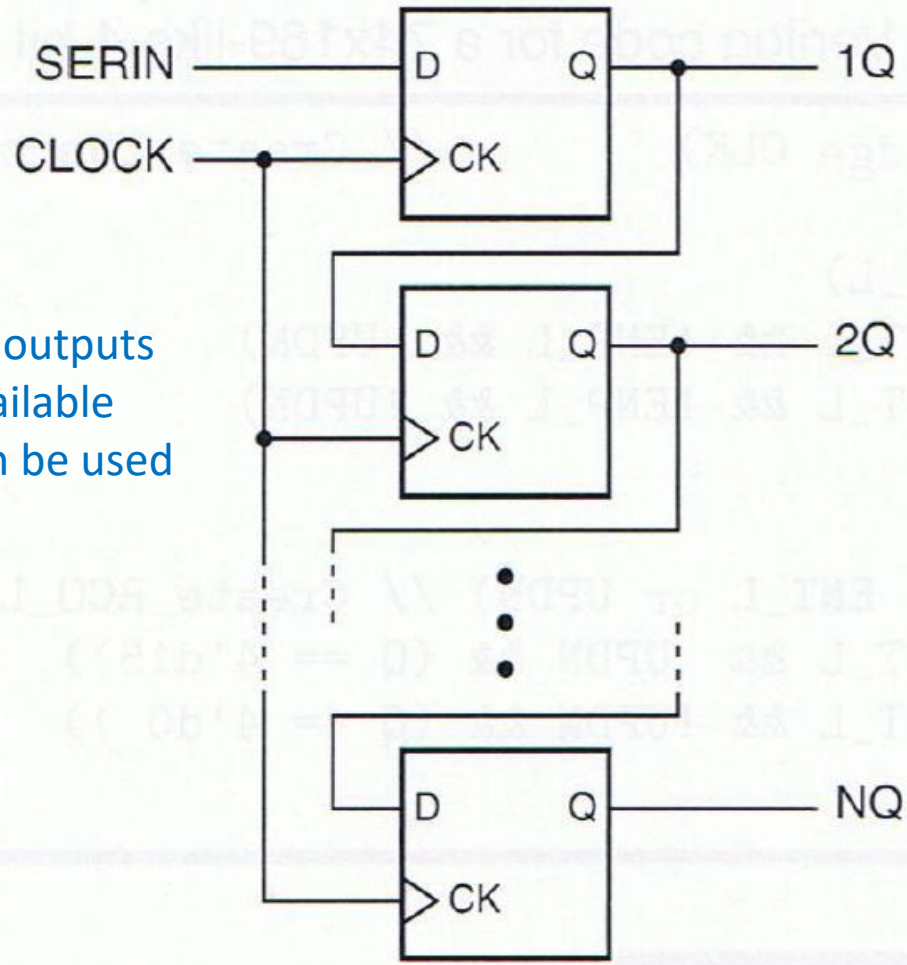

Figure 8-38
Structure of a serial-in, parallel-out shift register.

Shift Registers (Parallel-in, Serial-out)

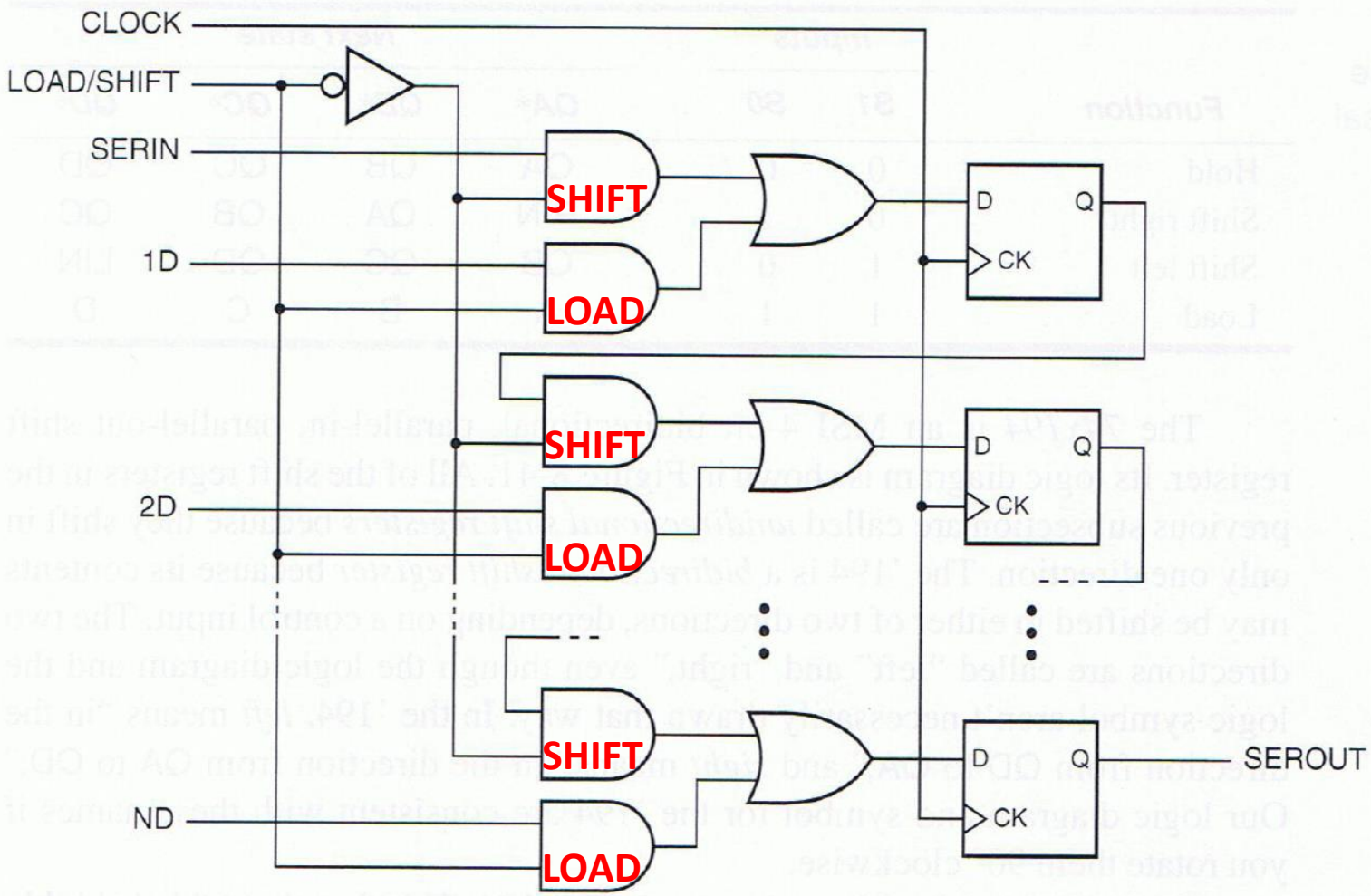

Figure 8-39 Structure of a parallel-in, serial-out shift register.

Shift Operations

- All of the shift registers in the previous slides are called unidirectional shift registers because they shift in only one direction
- But there is bidirectional shift registers where its contents may be shifted in either of two directions, depending on a control input.

shift	Operating	Result (1 bit Shift)	Result (2 bits Shift)
Left (add 0's to the right)	0100	1000	0000
	0101	1010	0100
Right (add 0's to the left)	0011	0001	0000
	1011	0101	0010

Shift **i** bits to the left ⇔ × $\mathbf{2^i}$
Shift **i** bits to the right ⇔ ÷ $\mathbf{2^i}$

74x194 Universal Shift Register

bidirectional shift register

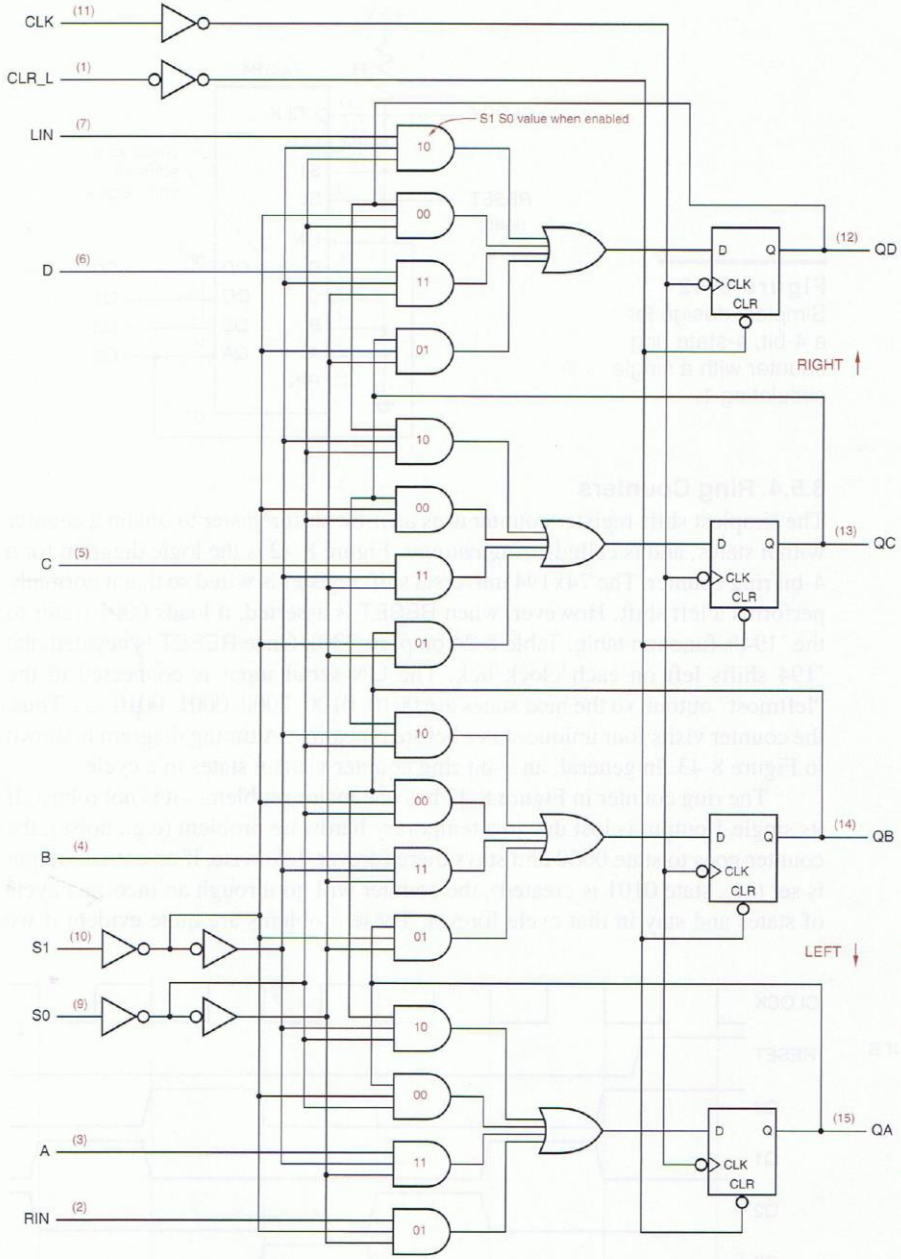

Figure 8-41 Logic diagram for the 74x194 4-bit universal shift register, including pin numbers for a standard 16-pin dual in-line package.

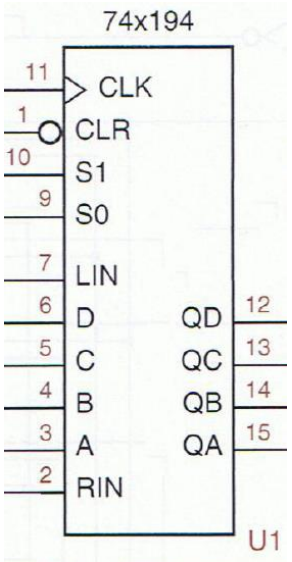

LIN (left-in) input is the serial input for left shifts.

RIN(right-in) is the serial input for right shifts.

Function	Inputs S1	Inputs S0	Next state QA*	Next state QB*	Next state QC*	Next state QD*
Hold	0	0	QA	QB	QC	QD
Shift right	0	1	RIN	QA	QB	QC
Shift left	1	0	QB	QC	QD	LIN
Load	1	1	A	B	C	D

74x194 Universal Shift Register (Load)

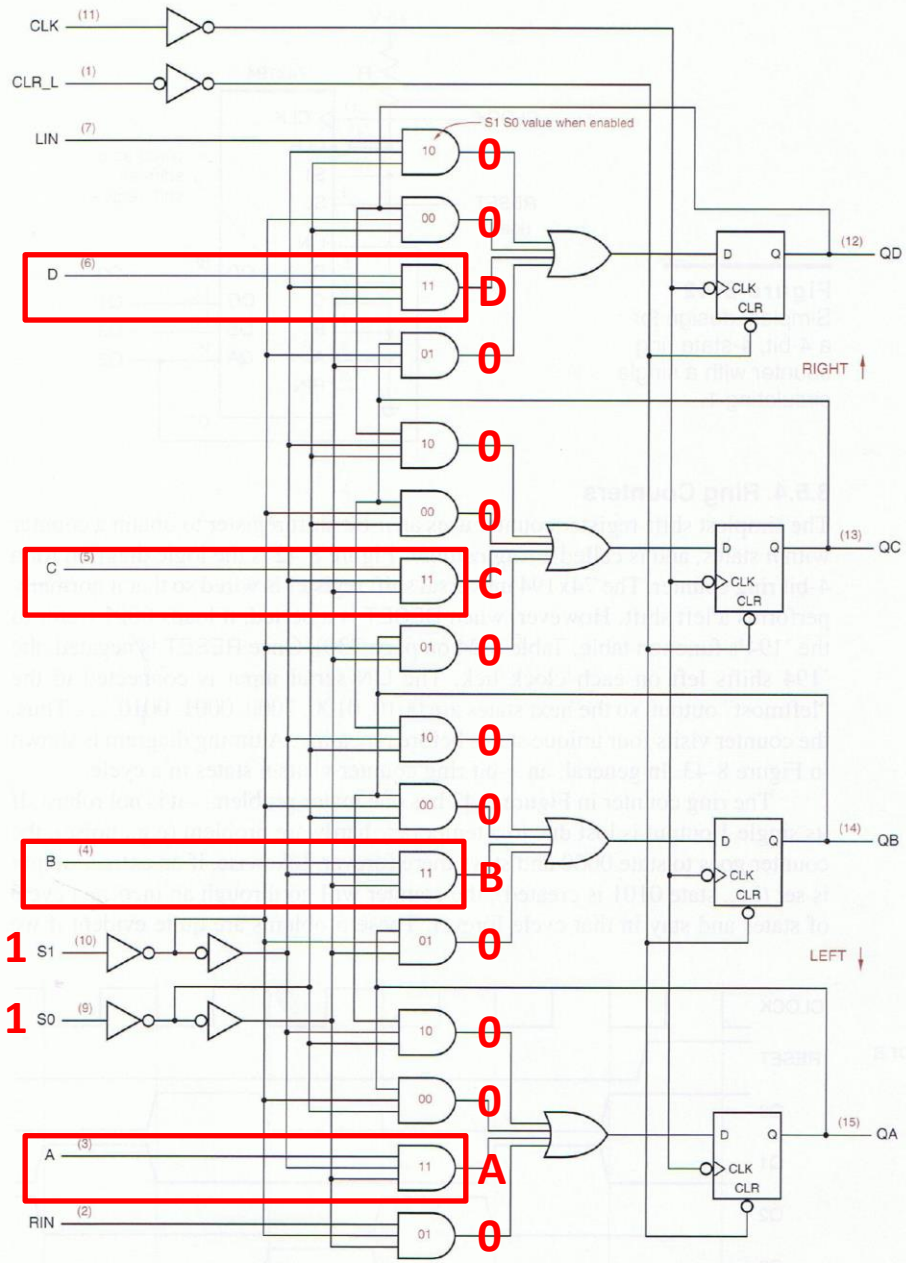

Figure 8-41 Logic diagram for the 74x194 4-bit universal shift register, including pin numbers for a standard 16-pin dual in-line package.

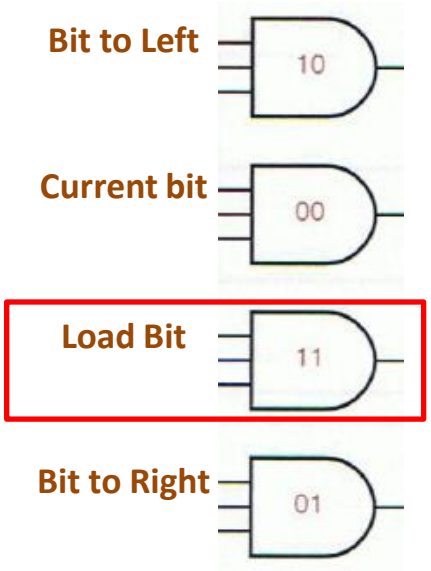

Function	Inputs S1	Inputs S0	Next state QA*	QB*	QC*	QD*
Hold	0	0	QA	QB	QC	QD
Shift right	0	1	RIN	QA	QB	QC
Shift left	1	0	QB	QC	QD	LIN
Load	1	1	A	B	C	D

74x194 Universal Shift Register (Hold)

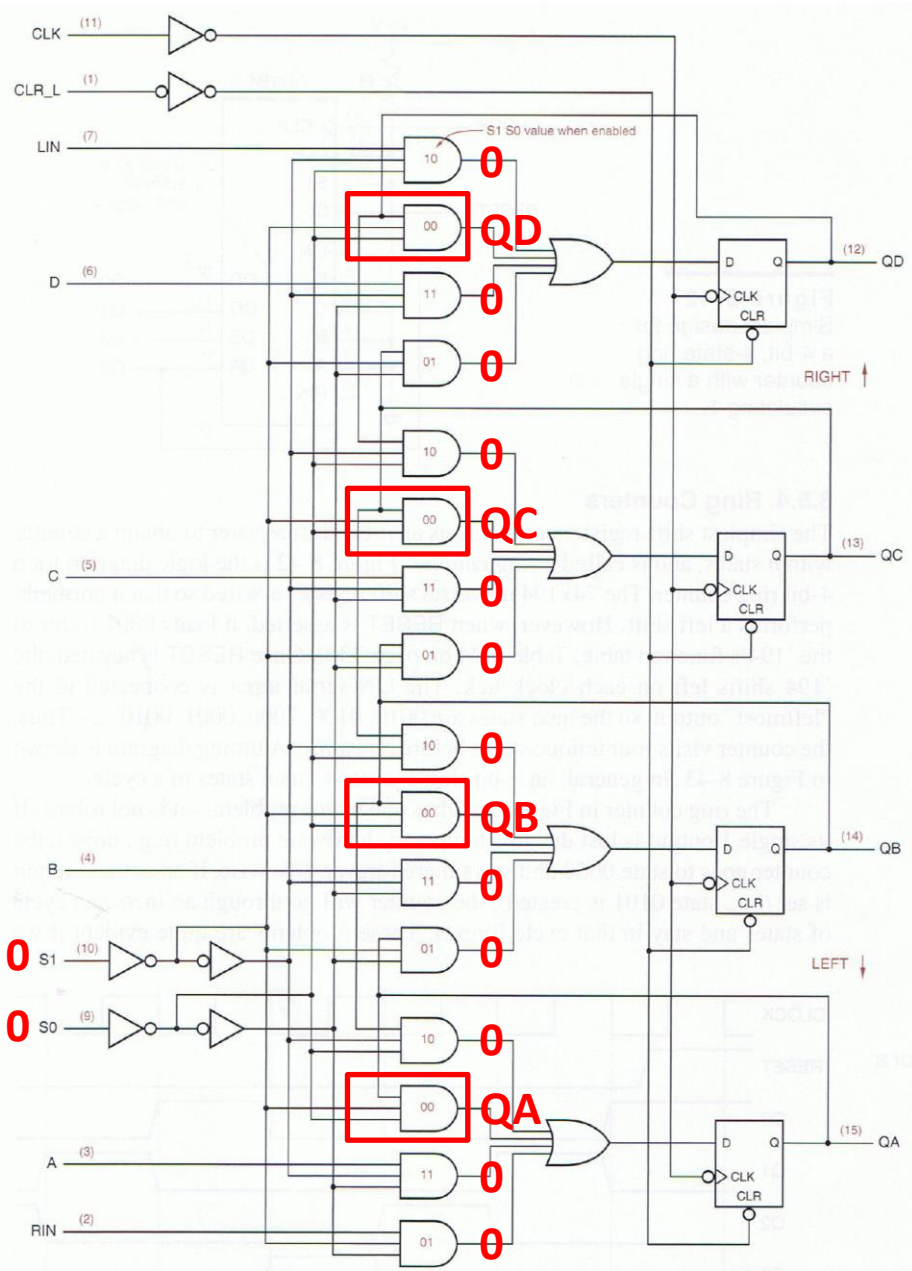

Figure 8-41 Logic diagram for the 74x194 4-bit universal shift register, including pin numbers for a standard 16-pin dual in-line package.

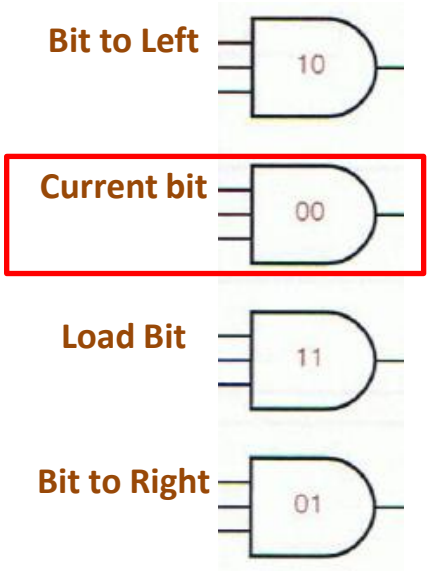

Function	Inputs S1	Inputs S0	Next state QA*	QB*	QC*	QD*
Hold	0	0	QA	QB	QC	QD
Shift right	0	1	RIN	QA	QB	QC
Shift left	1	0	QB	QC	QD	LIN
Load	1	1	A	B	C	D

74x194 Universal Shift Register (Shift Right)

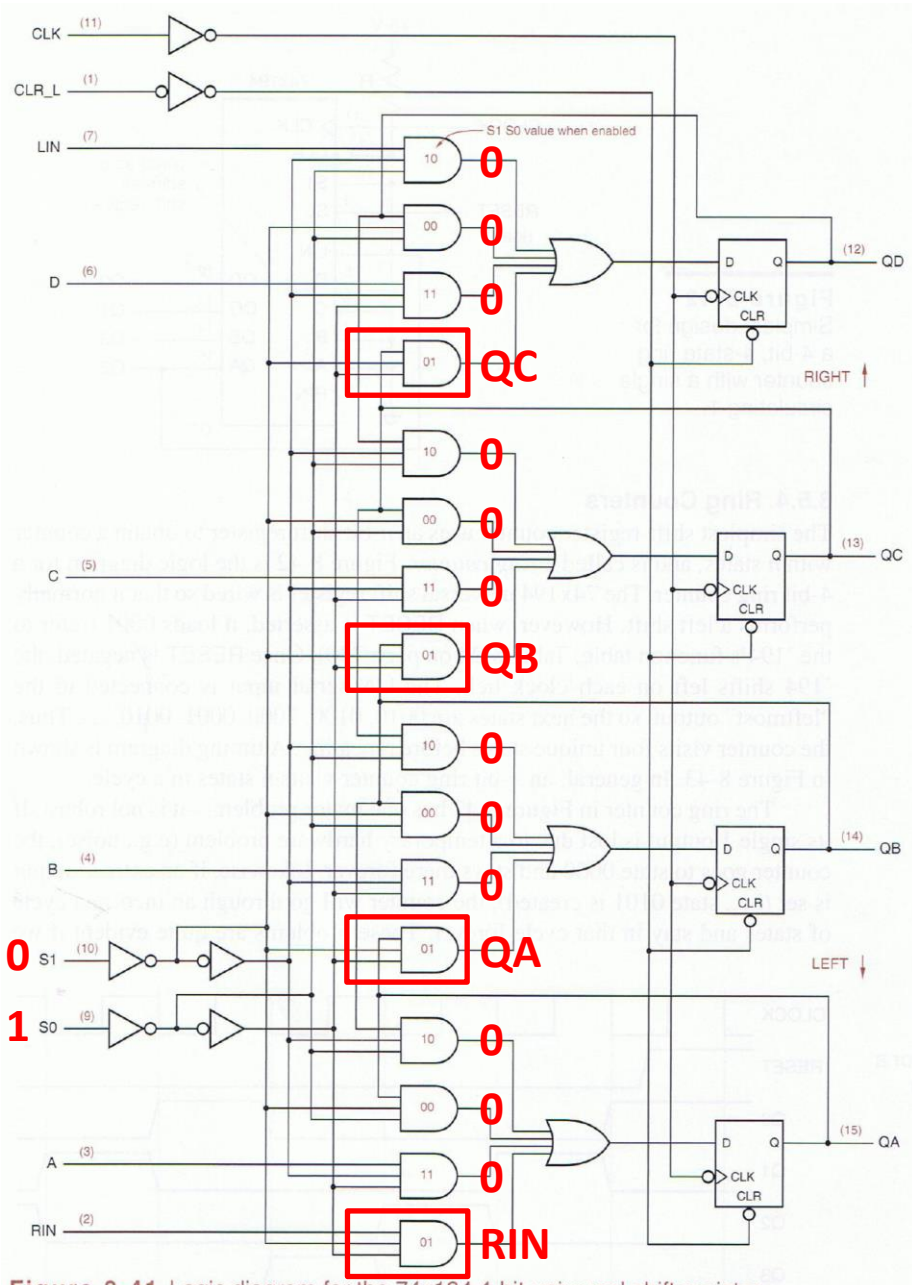

Figure 8-41 Logic diagram for the 74x194 4-bit universal shift register, including pin numbers for a standard 16-pin dual in-line package.

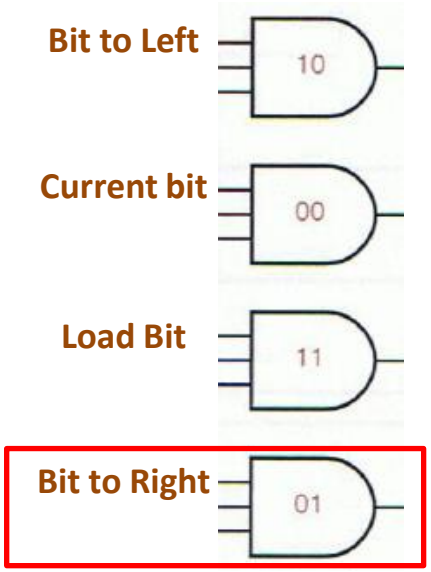

Function	Inputs S1	Inputs S0	Next state QA*	QB*	QC*	QD*
Hold	0	0	QA	QB	QC	QD
Shift right	0	1	RIN	QA	QB	QC
Shift left	1	0	QB	QC	QD	LIN
Load	1	1	A	B	C	D

74x194 Universal Shift Register (Shift Left)

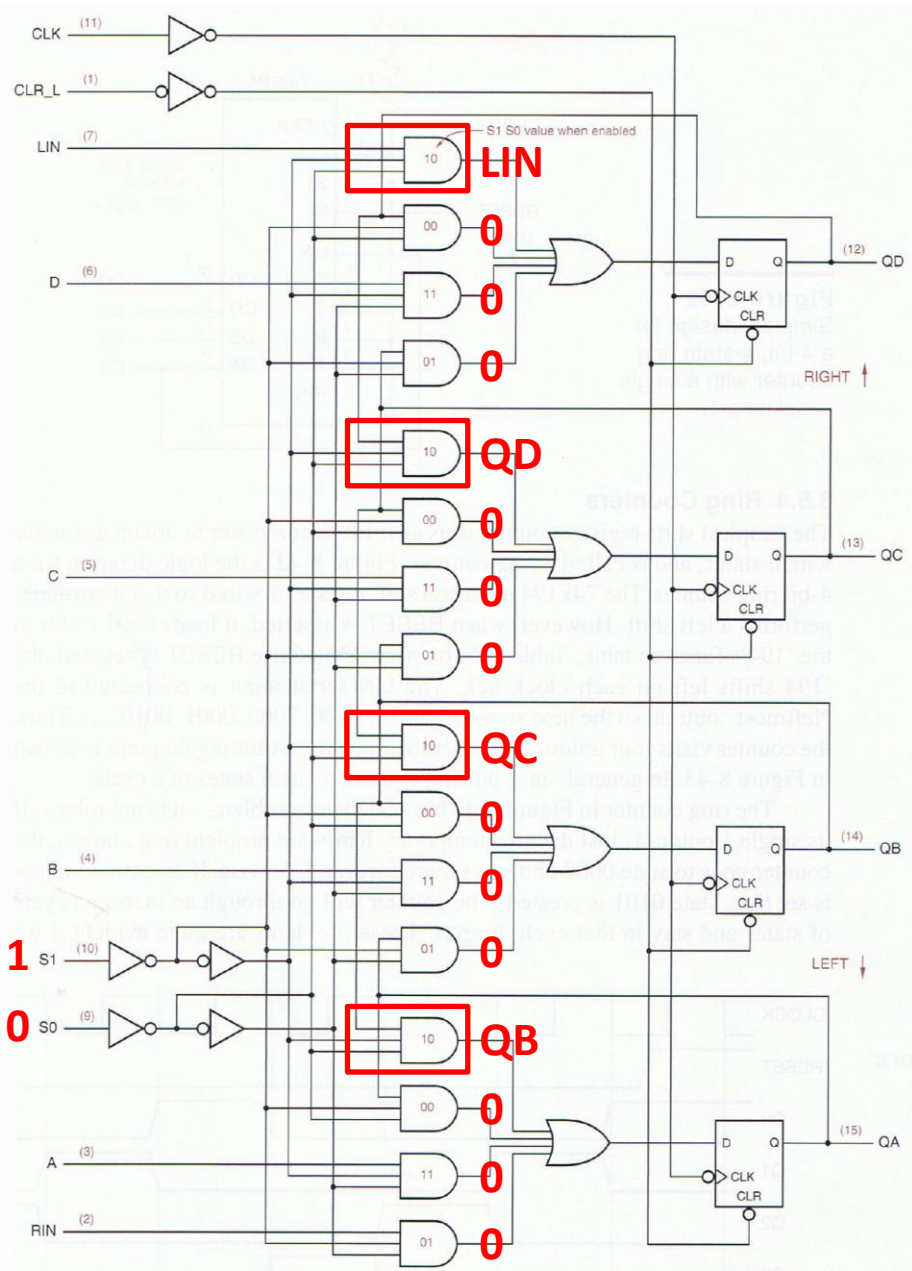

Figure 8-41 Logic diagram for the 74x194 4-bit universal shift register, including pin numbers for a standard 16-pin dual in-line package.

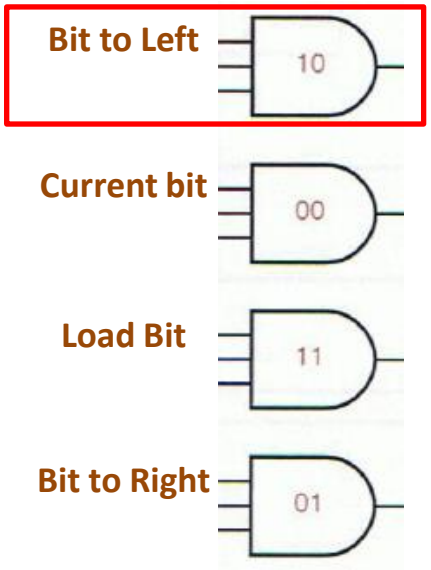

Function	Inputs S1	Inputs S0	Next state QA*	QB*	QC*	QD*
Hold	0	0	QA	QB	QC	QD
Shift right	0	1	RIN	QA	QB	QC
Shift left	1	0	QB	QC	QD	LIN
Load	1	1	A	B	C	D

Building Sequence Detectors with Shift Registers (overlapping sequences)

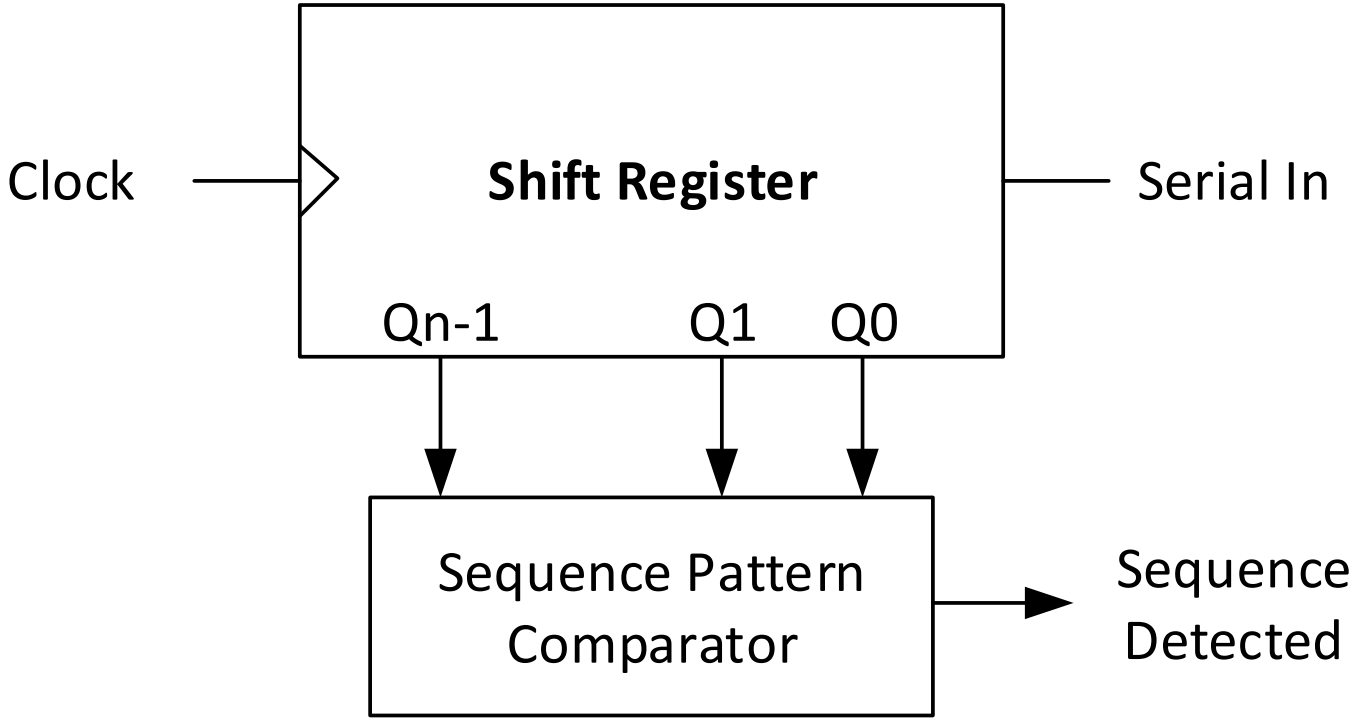

How to implement efficiently the sequence pattern comparator?

Ring Counters

- The simplest shift-register counter uses an *n*-bit shift register to obtain a counter with *n* states, and is called a ring counter

Ring Counter State Diagram

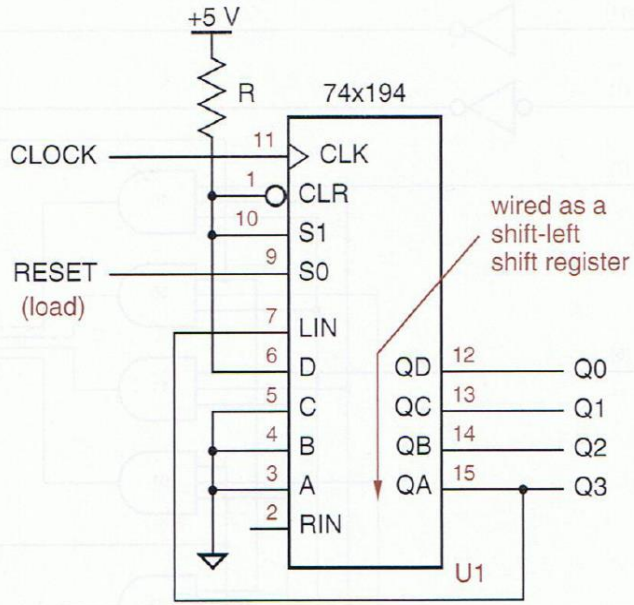

Figure 8-42
Simplest design for a 4-bit, 4-state ring counter with a single circulating 1.

Initial sate is 0001
D="1", the others inputs are linked to the ground

The LIN serial input is connected to the "leftmost" output, so the next states are 0001, 0010, 0100, 1000 , 0001, ...

Thus, the counter visits four unique states before repeating

Ring Counters

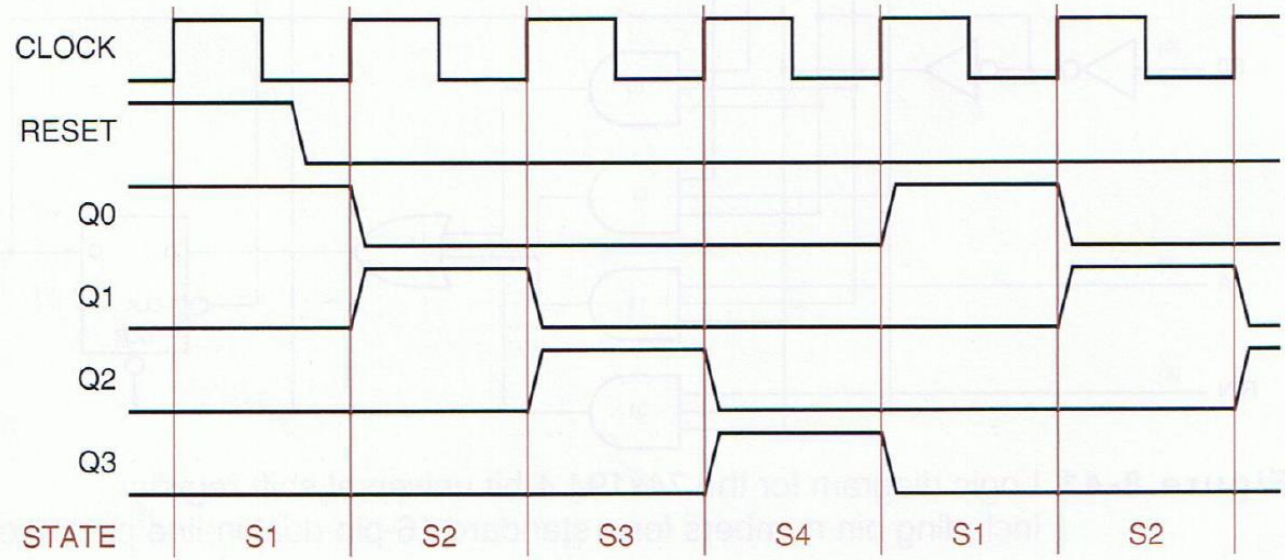

Figure 8-43
Timing diagram for a 4-bit ring counter.

- The ring counter has one major problem-it is not robust
  - If its single 1 output is lost due to a temporary hardware problem (e.g., noise), the counter goes to state 0000 and stays there forever.
  - Likewise, if an extra 1 output is set (i.e., state 0101 is created), the counter will go through an incorrect cycle of states and stay in that cycle forever.

Ring Counter State Diagram

- These problems are quite evident if we draw the complete state diagram for the counter circuit, which has 16 states
  - As shown in Figure 8-44, there are 12 states that are not part of the normal counting cycle. If the counter somehow gets off the normal cycle, it stays off it.

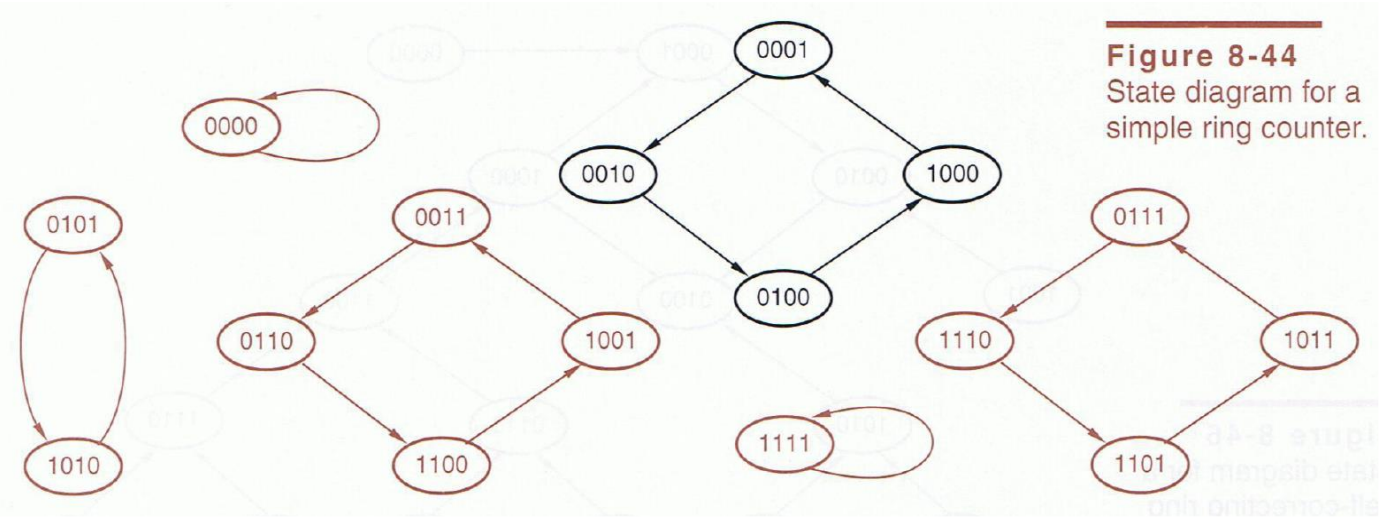

Figure 8-44
State diagram for a simple ring counter.

Self-correcting Ring Counter

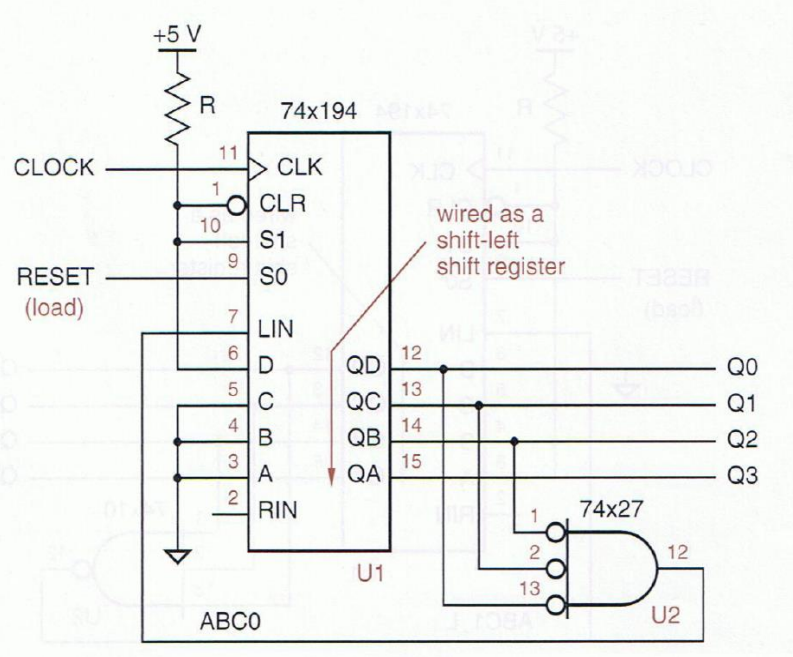

Figure 8-45
Self-correcting 4-bit, 4-state ring counter with a single circulating 1.

The circuit self-correcting ring uses a NOR gate to shift a 1 into LIN only when the three least significant bits are counter 0. This results in the state diagram in Figure 8-46; all abnormal states lead back into the normal cycle

Regardless of the initial state of the shift register on power-up, it reaches state 0001 within four clock ticks

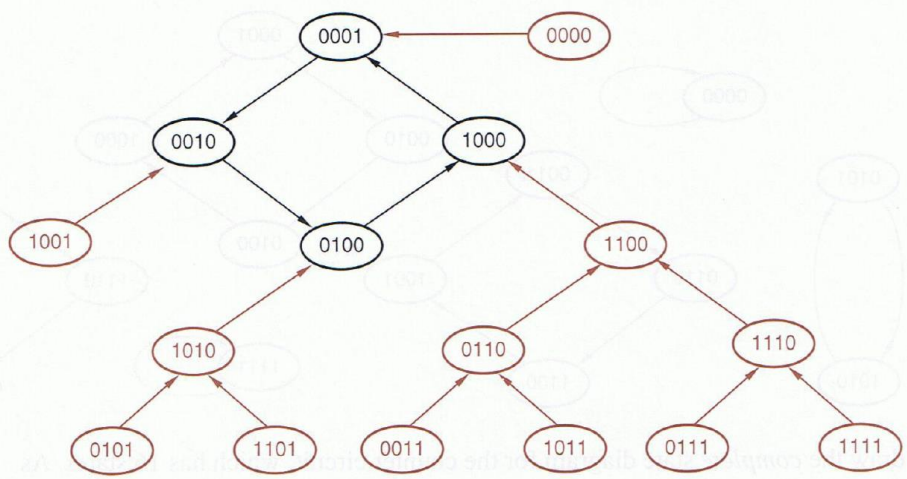

Figure 8-46
State diagram for a self-correcting ring counter.

Johnson Counter (twisted ring)

- An *n*-bit shift register with the complement of the serial output fed back into the serial input is a counter with 2*n* states and is called a twisted-ring, or Johnson counter.
- The counter can be initialized with a reset, with the negation being responsible for introducing values of 1 in the count.

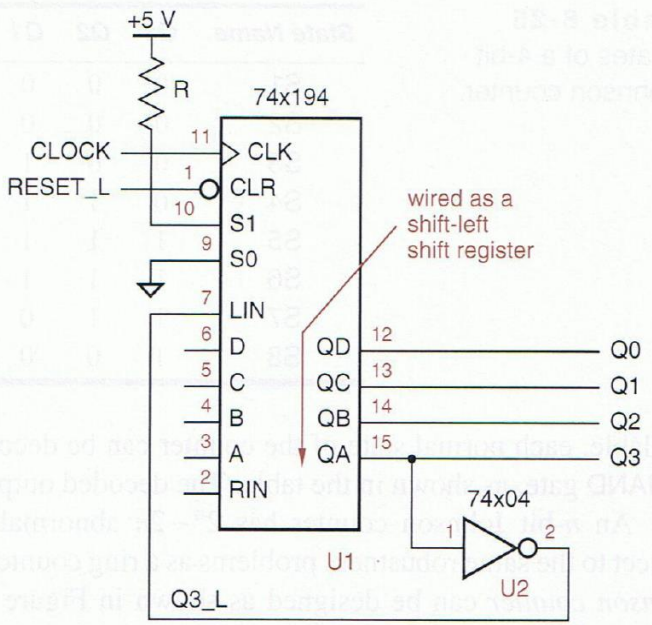

Figure 8-48
Basic 4-bit, 8-state Johnson counter.

Table 8-25
States of a 4-bit Johnson counter.

State Name	Q3	Q2	Q1	Q0	Decoding
S1	0	0	0	0	Q3′ · Q0′
S2	0	0	0	1	Q1′ · Q0
S3	0	0	1	1	Q2′ · Q1
S4	0	1	1	1	Q3′ · Q2
S5	1	1	1	1	Q3 · Q0
S6	1	1	1	0	Q1 · Q0′
S7	1	1	0	0	Q2 · Q1′
S8	1	0	0	0	Q3 · Q2′

Johnson Counter (twisted ring)

Figure 8-49 Timing diagram for a 4-bit Johnson counter.

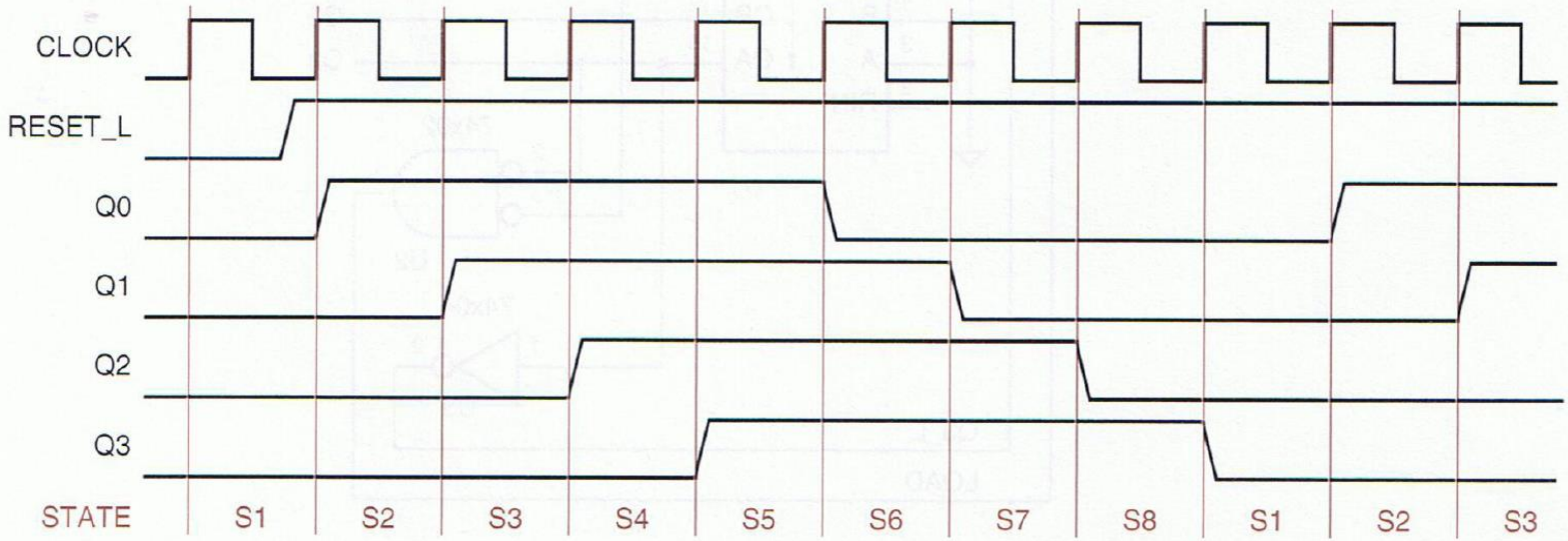

Self Correcting Johnson Counter

An *n*-bit Johnson counter has 2^n- 2n abnormal states and is therefore self-correcting Johnson subject to the same robustness problems as a ring counter

Figure 8-50
Self-correcting 4-bit, 8-state Johnson counter.

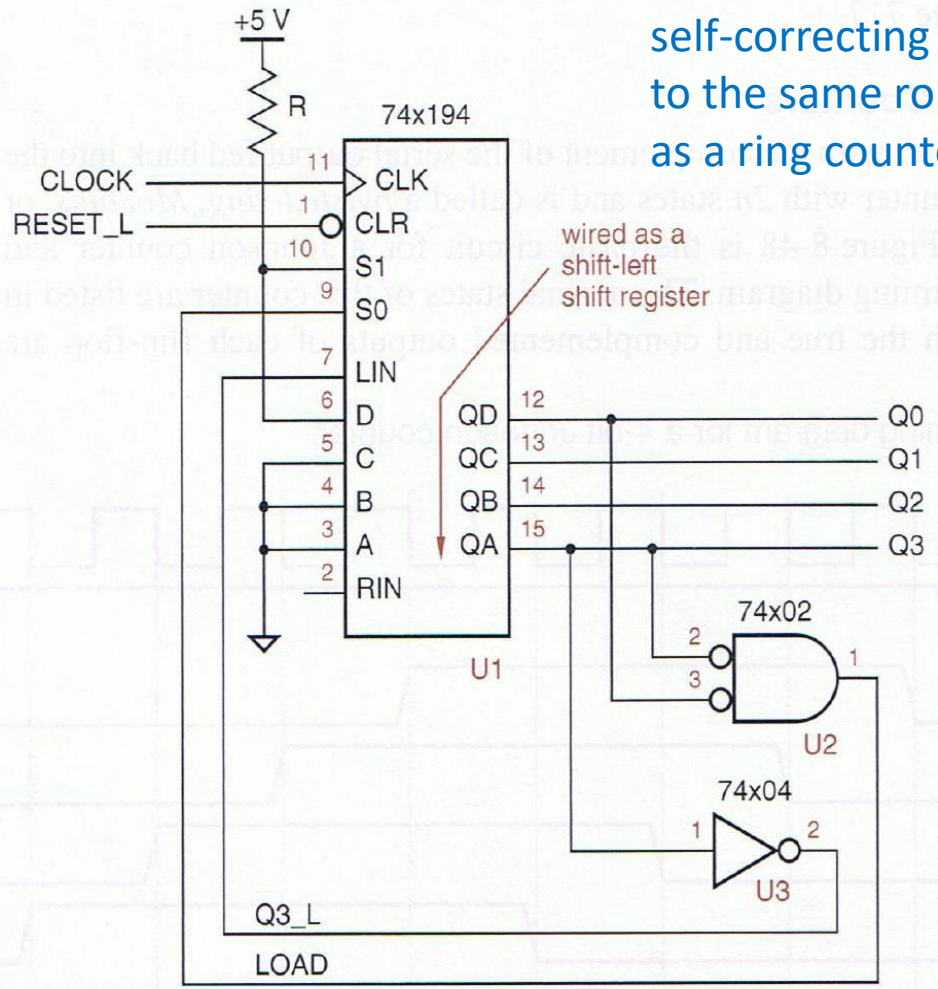

Self correcting

This circuit loads 0001 as the next state whenever the current state is OxxO

Conclusion

- At the end of this lecture and corresponding lab, it is fundamental to know some fundamental sequential blocks / components, namely multibit registers, counters and shift registers

Reading chapter 7 (4th ed.) or chapter 11 (5th ed.) of *John F. Wakerly, "Digital Design – Principles and Practices", Pearson – Prentice Hall*, is highly recommended.